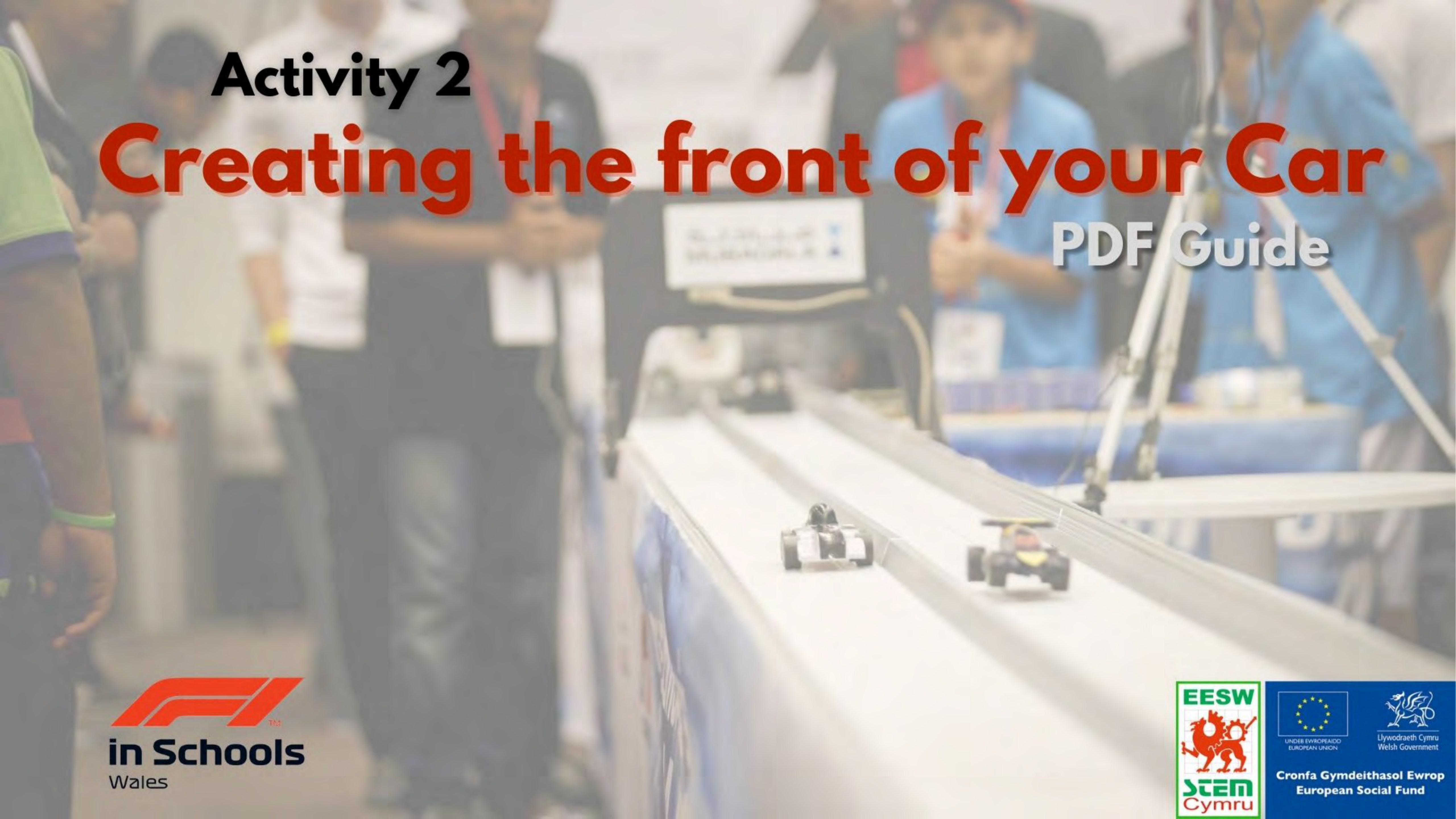

Activity 2

Creating the front of your Car

PDF Guide

in Schools
Wales

EESW
STEM
Cymru

UNDEB EWROPEAIDD
EUROPEAN UNION

Llywodraeth Cymru
Welsh Government

Cronfa Gymdeithasol Ewrop
European Social Fund

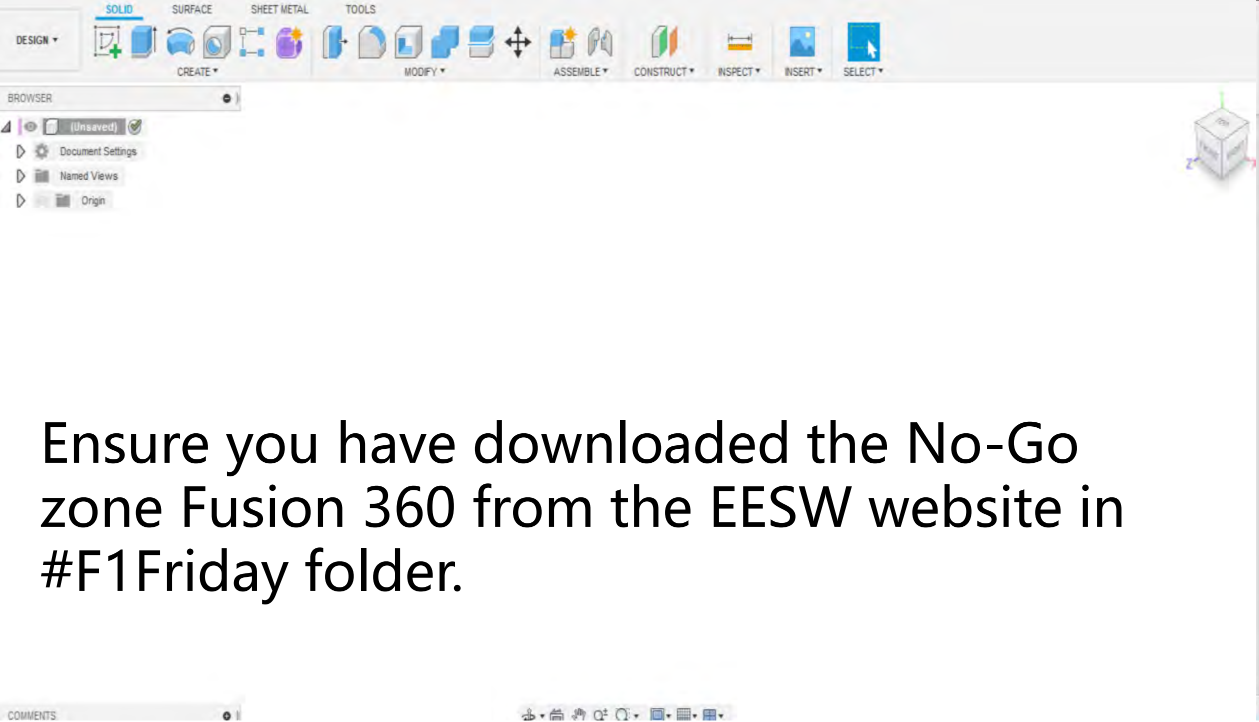
SOLID
SURFACE
SHEET METAL
TOOLS
DESIGN
CREATE
MODIFY
ASSEMBLE
CONSTRUCT
INSPECT
INSERT
SELECT
BROWSER
(Unsaved)
Document Settings
Named Views
Origin
COMMENTS

Ensure you have downloaded the No-Go zone Fusion 360 from the EESW website in #F1Friday folder.

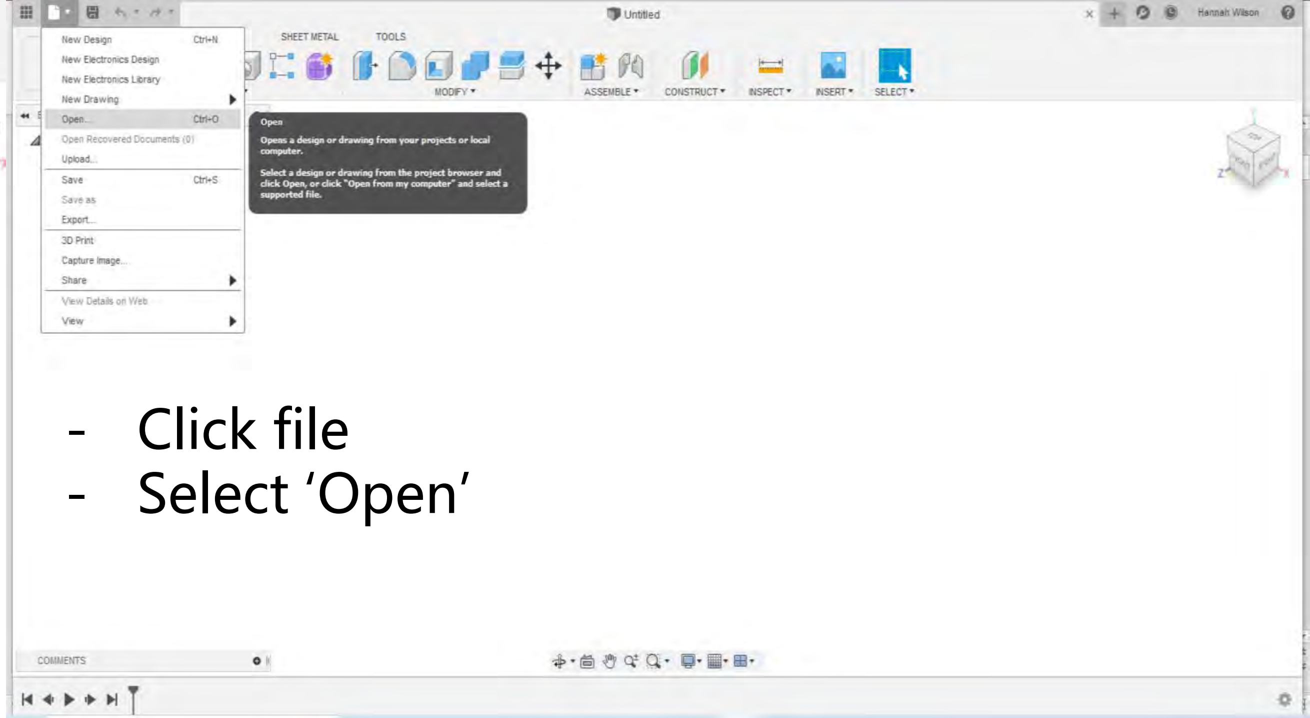
Untitled
SHEET METAL
TOOLS
New Design Ctrl+N
New Electronics Design
New Electronics Library
New Drawing
Open... Ctrl+O
Open Recovered Documents (0)
Upload...
Save Ctrl+S
Save as
Export...
3D Print
Capture Image...
Share
View Details on Web
View
MODIFY
ASSEMBLE
CONSTRUCT
INSPECT
INSERT
SELECT
Hannah Wilson
COMMENTS

Open

Opens a design or drawing from your projects or local computer.

Select a design or drawing from the project browser and click Open, or click "Open from my computer" and select a supported file.

- Click file
- Select 'Open'

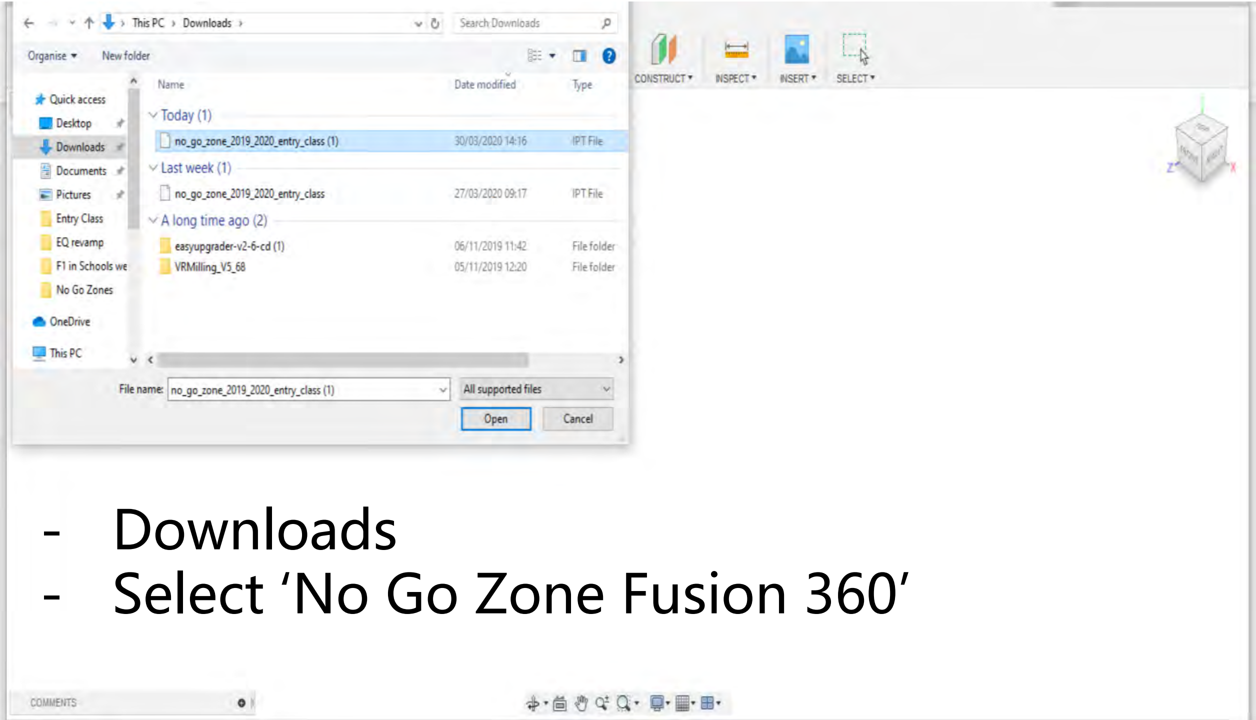
This PC › Downloads ›
Search Downloads
Organise
New folder
Quick access
Desktop
Downloads
Documents
Pictures
Entry Class
EQ revamp
F1 in Schools we
No Go Zones
OneDrive
This PC
CONSTRUCT
INSPECT
INSERT
SELECT
Open
Cancel
COMMENTS

Name	Date modified	Type
Today (1)		
no_go_zone_2019_2020_entry_class (1)	30/03/2020 14:16	IPT File
Last week (1)		
no_go_zone_2019_2020_entry_class	27/03/2020 09:17	IPT File
A long time ago (2)		
easyupgrader-v2-6-cd (1)	06/11/2019 11:42	File folder
VRMilling_V5_68	05/11/2019 12:20	File folder

File name: no_go_zone_2019_2020_entry_class (1)

All supported files

- Downloads
- Select 'No Go Zone Fusion 360'

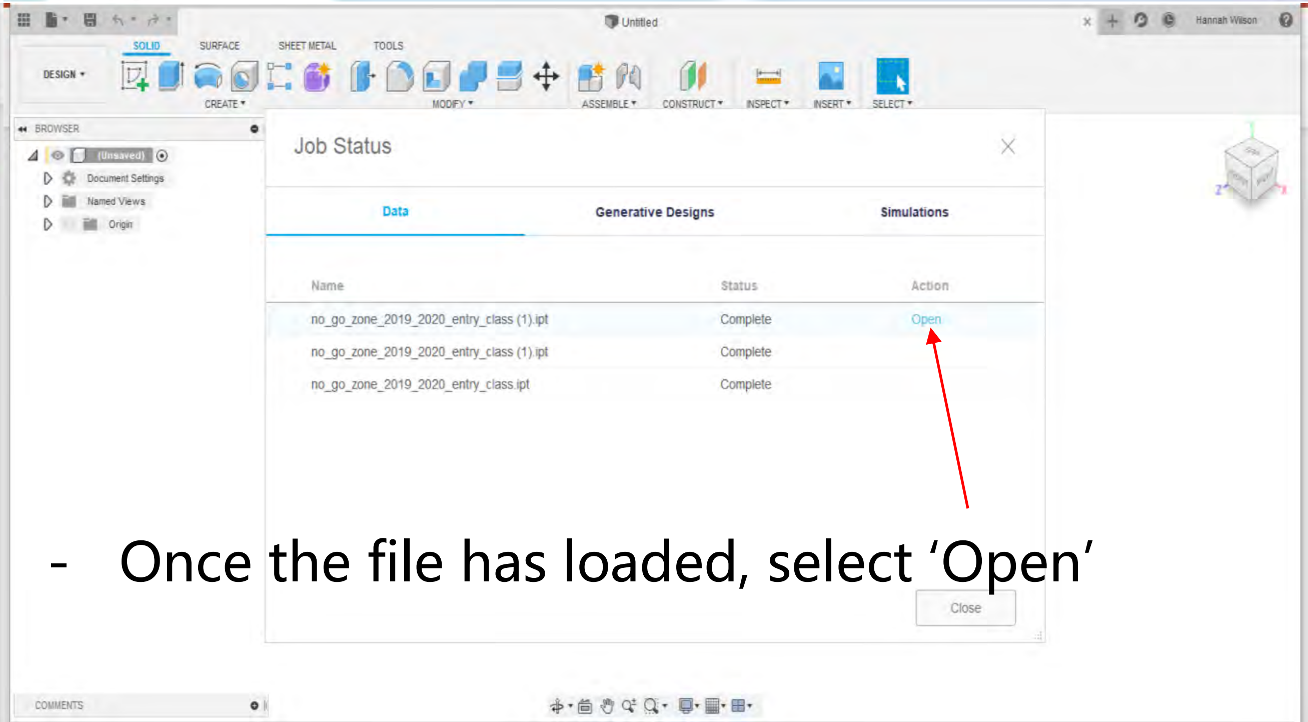
Untitled
SOLID
SURFACE
SHEET METAL
TOOLS
DESIGN
CREATE
MODIFY
ASSEMBLE
CONSTRUCT
INSPECT
INSERT
SELECT
Hannah Wilson
BROWSER
(Unsaved)
Document Settings
Named Views
Origin
Job Status
Data
Generative Designs
Simulations
Close
COMMENTS

Name	Status	Action
no_go_zone_2019_2020_entry_class (1).ipt	Complete	Open
no_go_zone_2019_2020_entry_class (1).ipt	Complete	
no_go_zone_2019_2020_entry_class.ipt	Complete	

- Once the file has loaded, select 'Open'

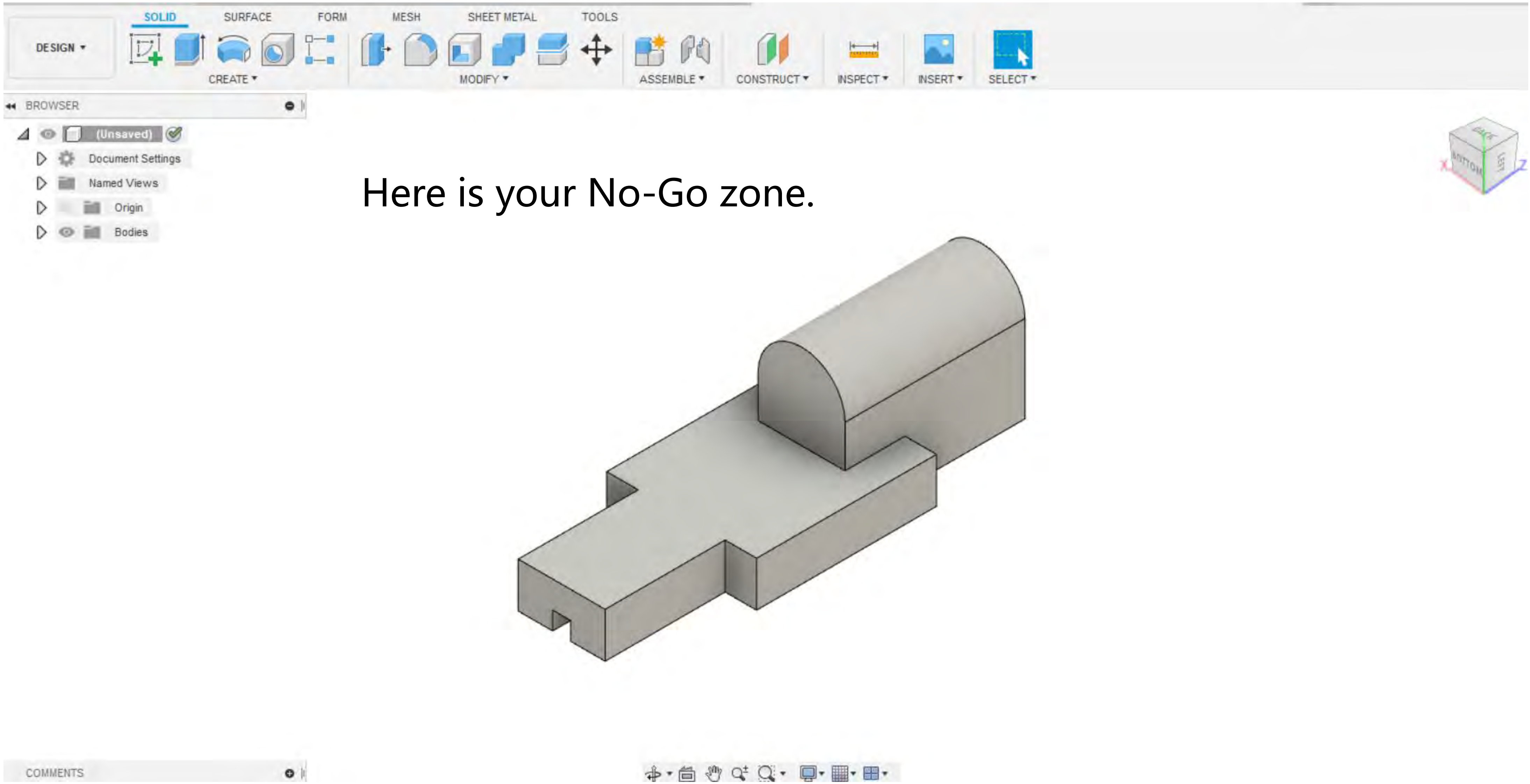
SOLID
SURFACE
FORM
MESH
SHEET METAL
TOOLS
DESIGN
CREATE
MODIFY
ASSEMBLE
CONSTRUCT
INSPECT
INSERT
SELECT
BROWSER
(Unsaved)
Document Settings
Named Views
Origin
Bodies
COMMENTS

Here is your No-Go zone.

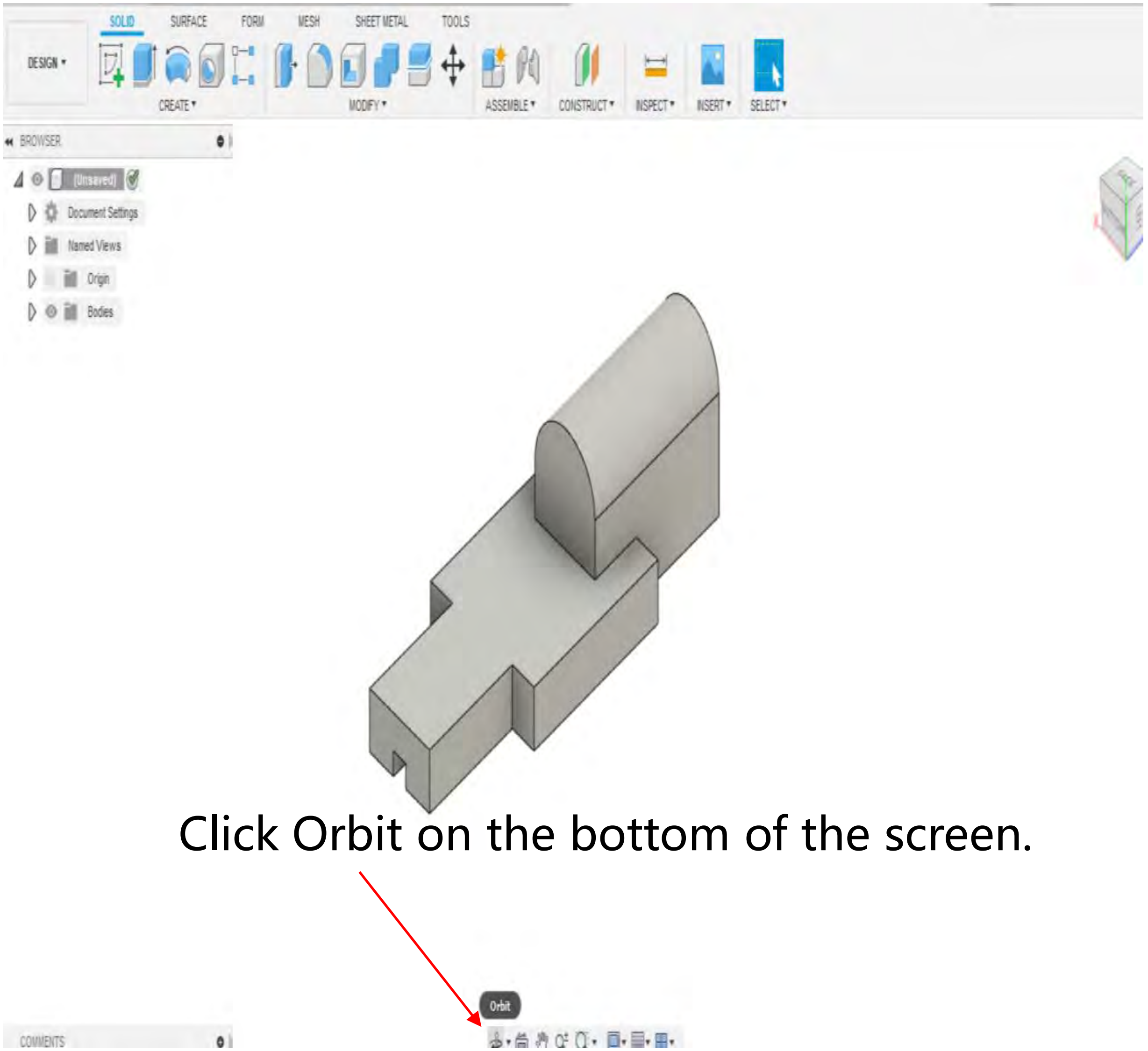
SOLID
SURFACE
FORM
MESH
SHEET METAL
TOOLS
DESIGN
CREATE
MODIFY
ASSEMBLE
CONSTRUCT
INSPECT
INSERT
SELECT
BROWSER
(Unsaved)
Document Settings
Named Views
Origin
Bodies
Orbit
COMMENTS

Click Orbit on the bottom of the screen.

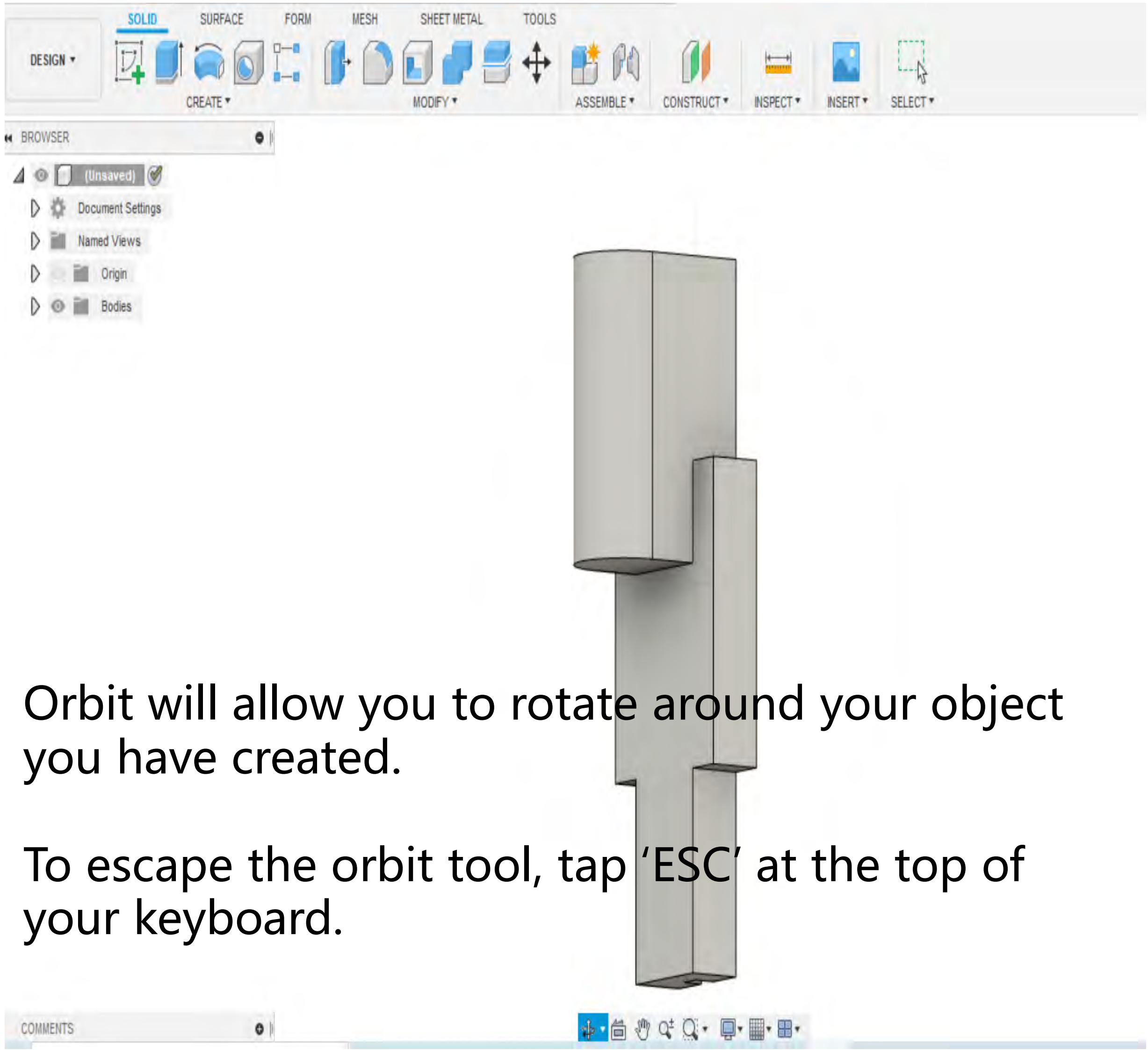
SOLID
SURFACE
FORM
MESH
SHEET METAL
TOOLS
DESIGN
CREATE
MODIFY
ASSEMBLE
CONSTRUCT
INSPECT
INSERT
SELECT
BROWSER
(Unsaved)
Document Settings
Named Views
Origin
Bodies
COMMENTS

Orbit will allow you to rotate around your object you have created.

To escape the orbit tool, tap ‘ESC’ at the top of your keyboard.

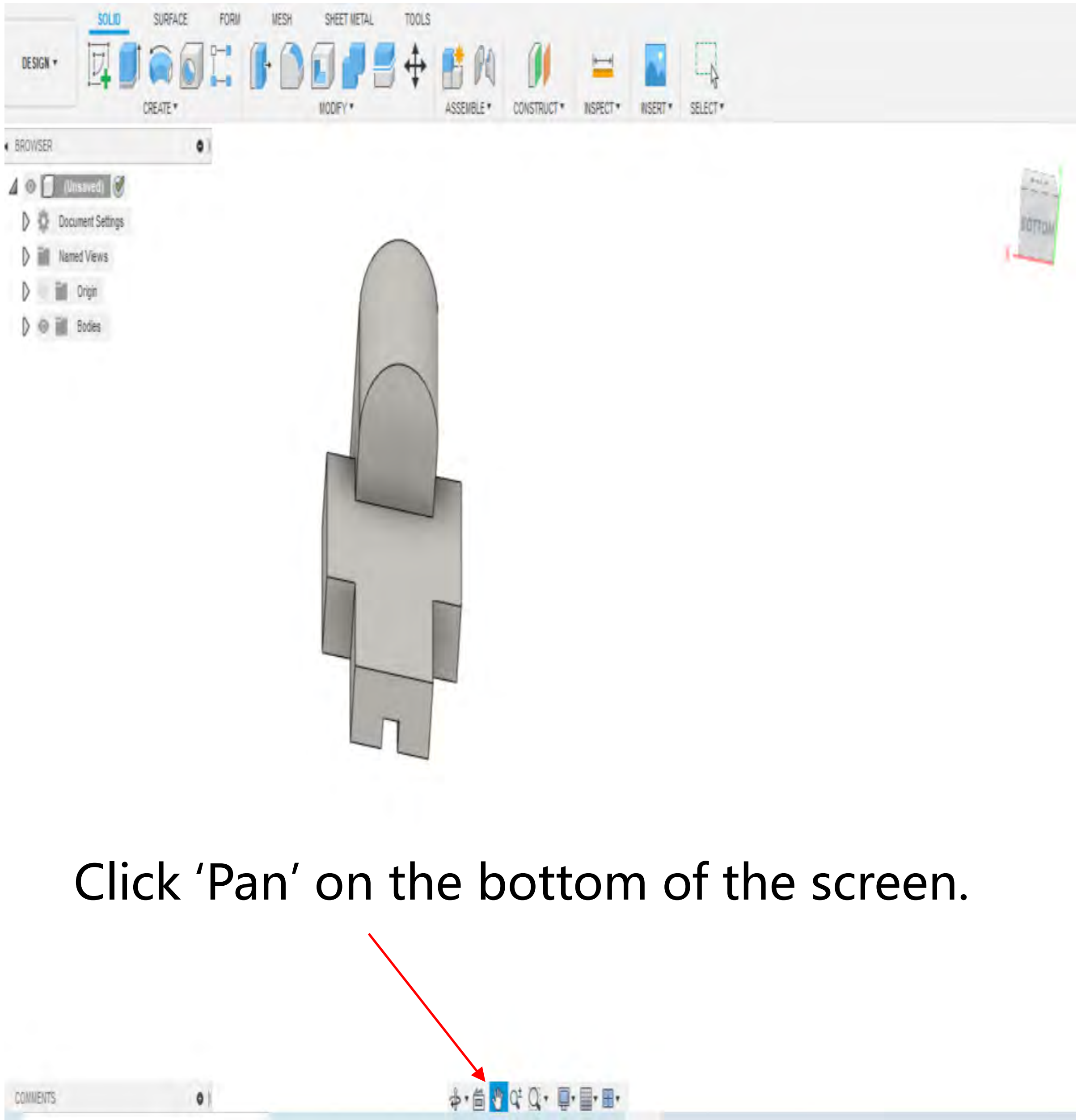
SOLID
SURFACE
FORM
MESH
SHEET METAL
TOOLS
DESIGN
CREATE
MODIFY
ASSEMBLE
CONSTRUCT
INSPECT
INSERT
SELECT
BROWSER
(Unsaved)
Document Settings
Named Views
Origin
Bodies
BOTTOM
COMMENTS

Click ‘Pan’ on the bottom of the screen.

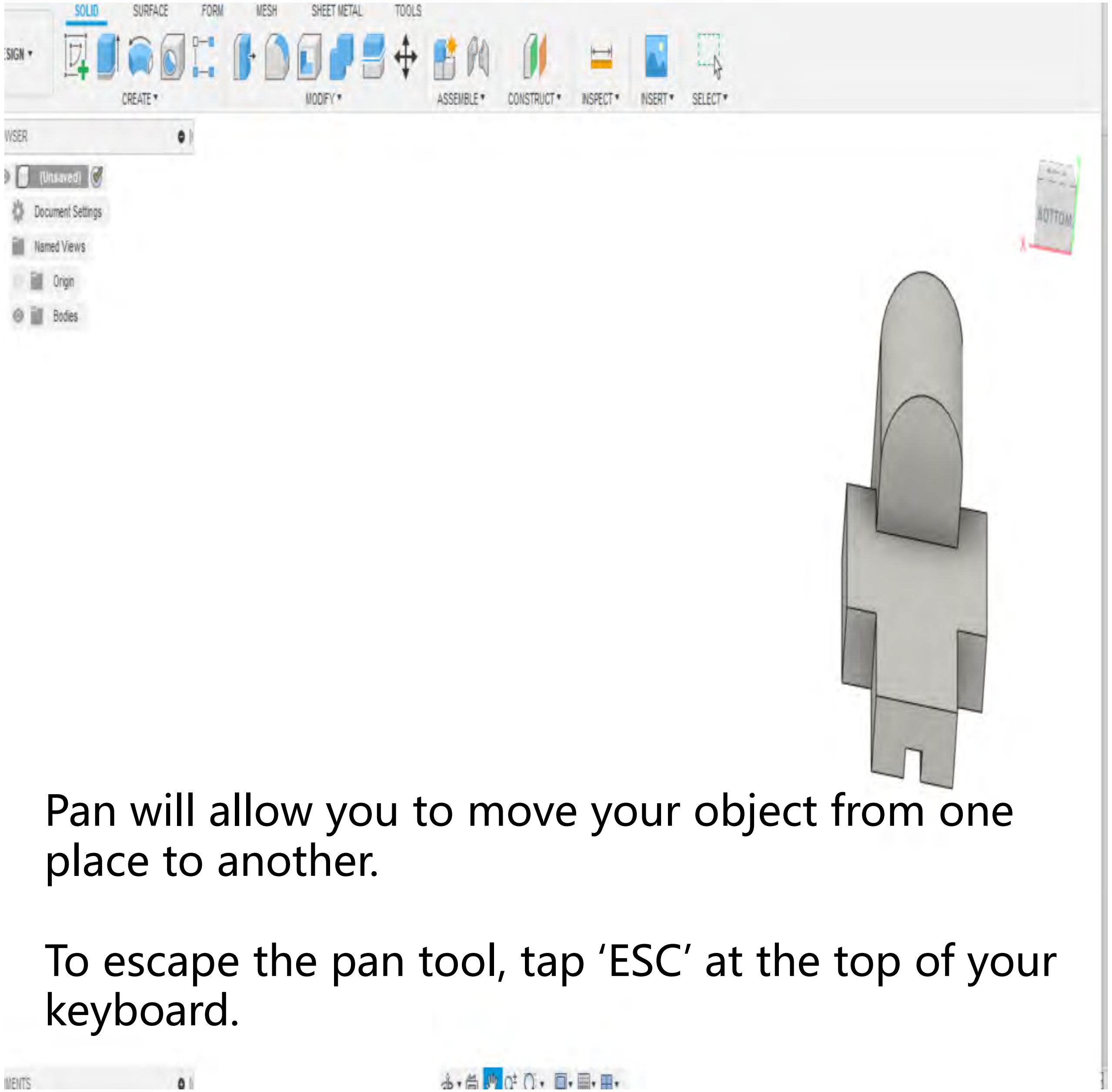
SOLID
SURFACE
FORM
MESH
SHEET METAL
TOOLS
CREATE
MODIFY
ASSEMBLE
CONSTRUCT
INSPECT
INSERT
SELECT
(Unsaved)
Document Settings
Named Views
Origin
Bodies
BOTTOM

Pan will allow you to move your object from one place to another.

To escape the pan tool, tap ‘ESC’ at the top of your keyboard.

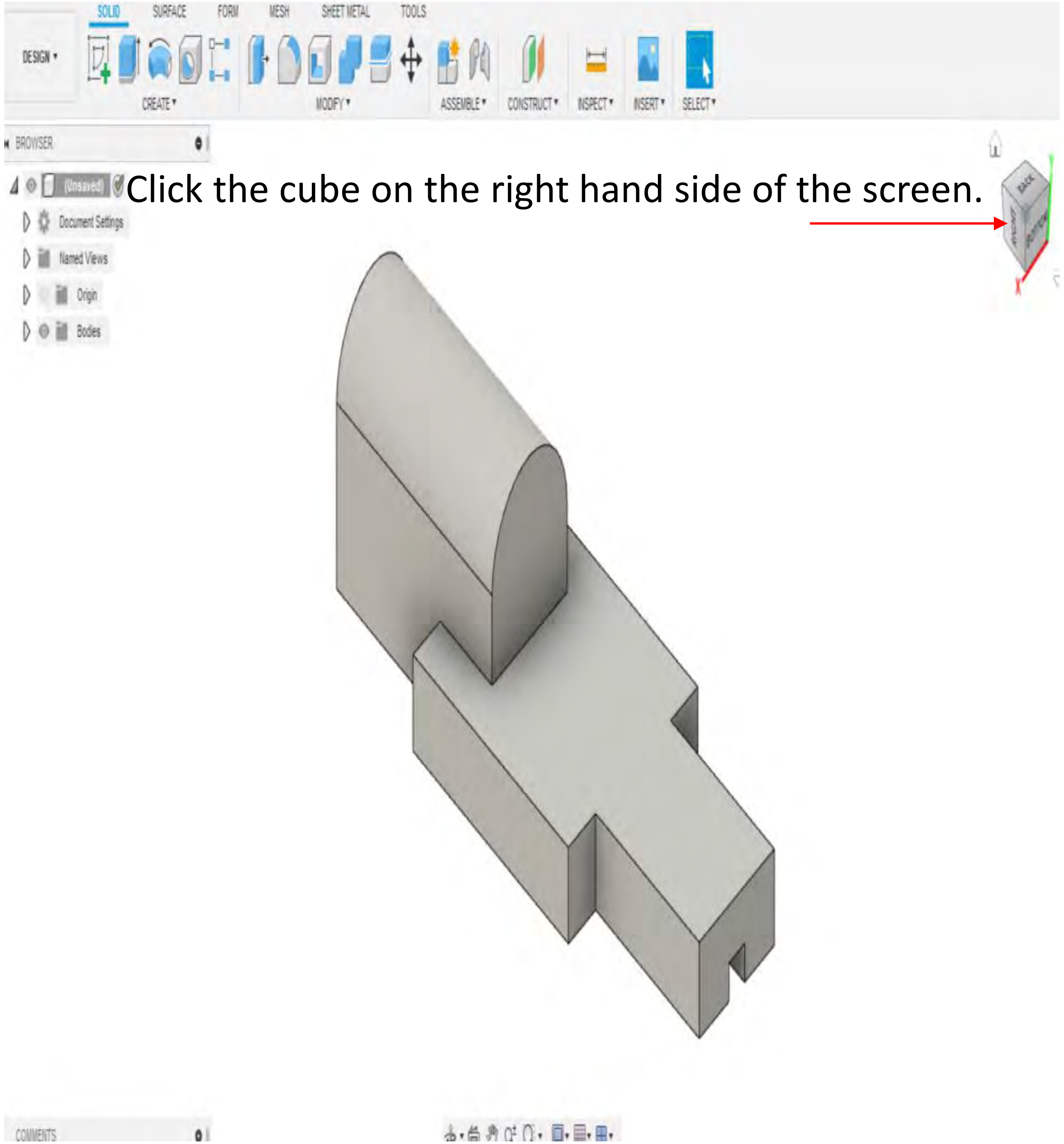
DESIGN
SOLID
SURFACE
FORM
MESH
SHEET METAL
TOOLS
CREATE
MODIFY
ASSEMBLE
CONSTRUCT
INSPECT
INSERT
SELECT
BROWSER
(Unsaved)
Document Settings
Named Views
Origin
Bodies
COMMENTS

Click the cube on the right hand side of the screen.

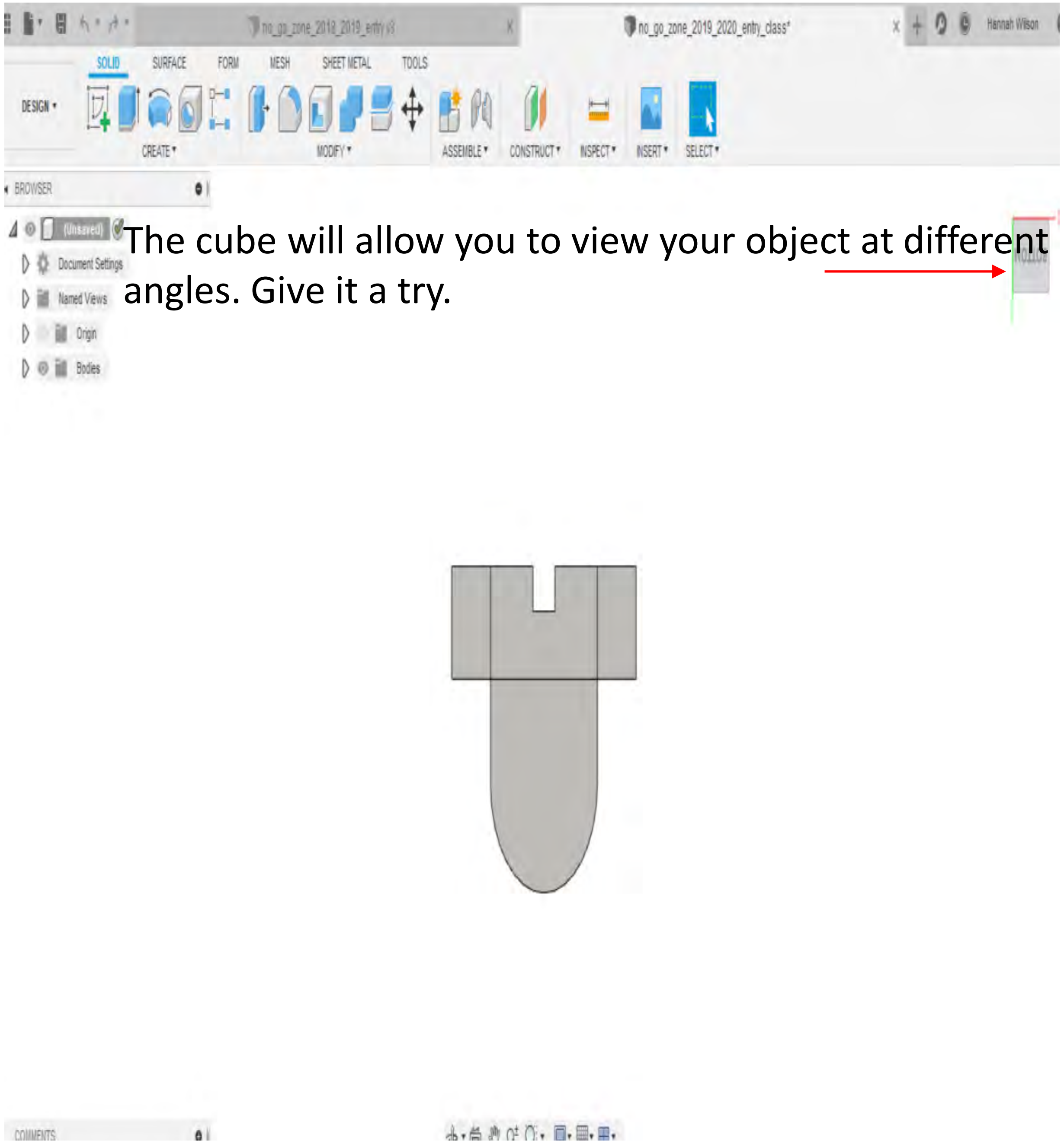
no_go_zone_2019_2020_entry_class*
Hannah Wilson
DESIGN
SOLID
SURFACE
FORM
MESH
SHEET METAL
TOOLS
CREATE
MODIFY
ASSEMBLE
CONSTRUCT
INSPECT
INSERT
SELECT
BROWSER
(Unsaved)
Document Settings
Named Views
Origin
Bodies
COMMENTS

The cube will allow you to view your object at different angles. Give it a try.

Using the scroller on your mouse, zoom out and in.

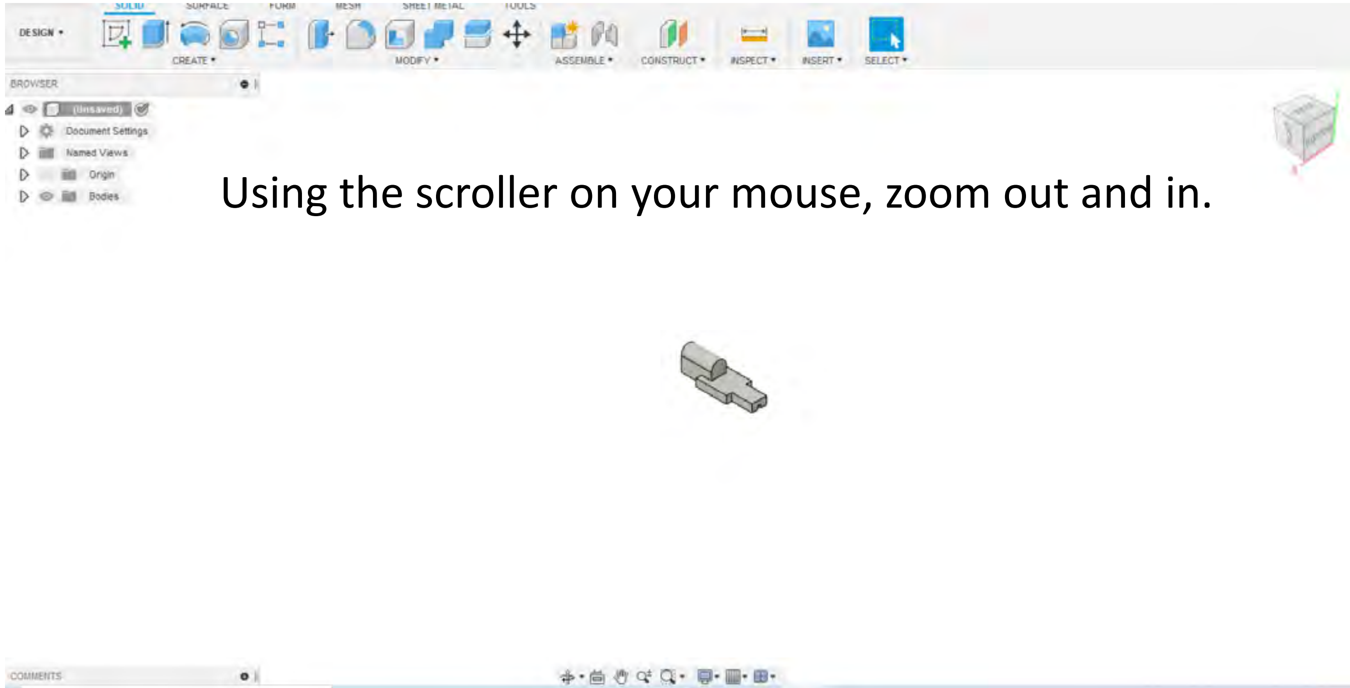
SOLID
SURFACE
FORM
MESH
SHEET METAL
TOOLS
DESIGN
CREATE
MODIFY
ASSEMBLE
CONSTRUCT
INSPECT
INSERT
SELECT
BROWSER
(Unsaved)
Document Settings
Named Views
Origin
Bodies
COMMENTS

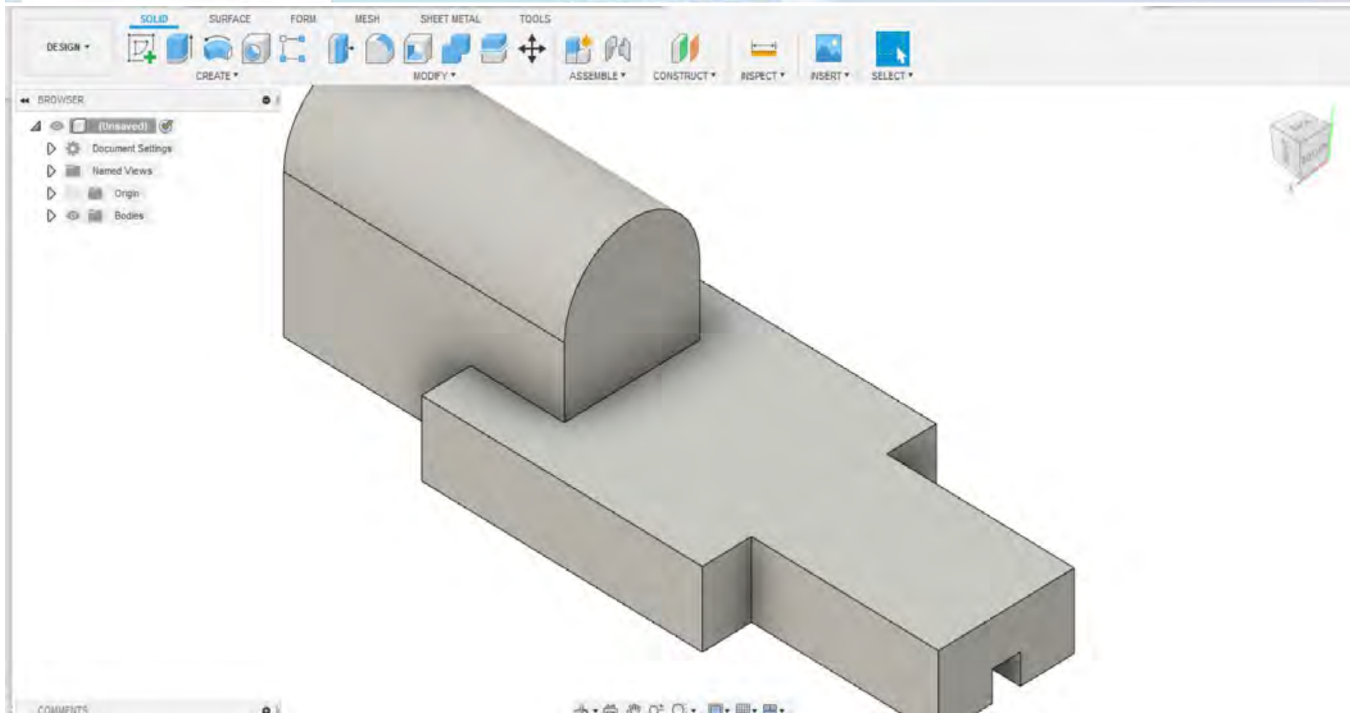
SOLID
SURFACE
FORM
MESH
SHEET METAL
TOOLS
DESIGN
CREATE
MODIFY
ASSEMBLE
CONSTRUCT
INSPECT
INSERT
SELECT
BROWSER
(Unsaved)
Document Settings
Named Views
Origin
Bodies
COMMENTS

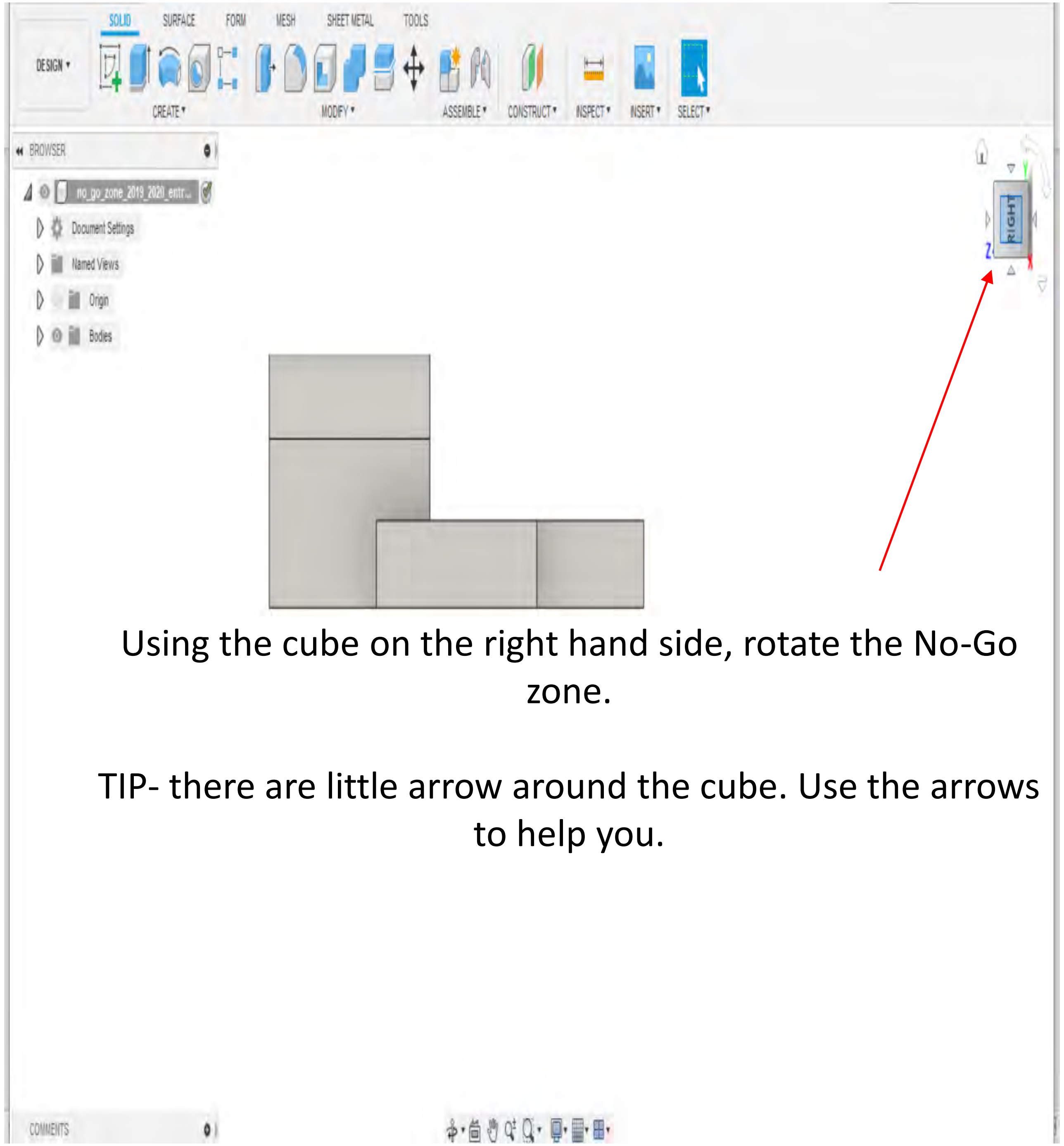
SOLID
SURFACE
FORM
MESH
SHEET METAL
TOOLS
DESIGN
CREATE
MODIFY
ASSEMBLE
CONSTRUCT
INSPECT
INSERT
SELECT
BROWSER
no_go_zone_2019_2020_entr...
Document Settings
Named Views
Origin
Bodies
RIGHT
COMMENTS

Using the cube on the right hand side, rotate the No-Go zone.

TIP- there are little arrow around the cube. Use the arrows to help you.

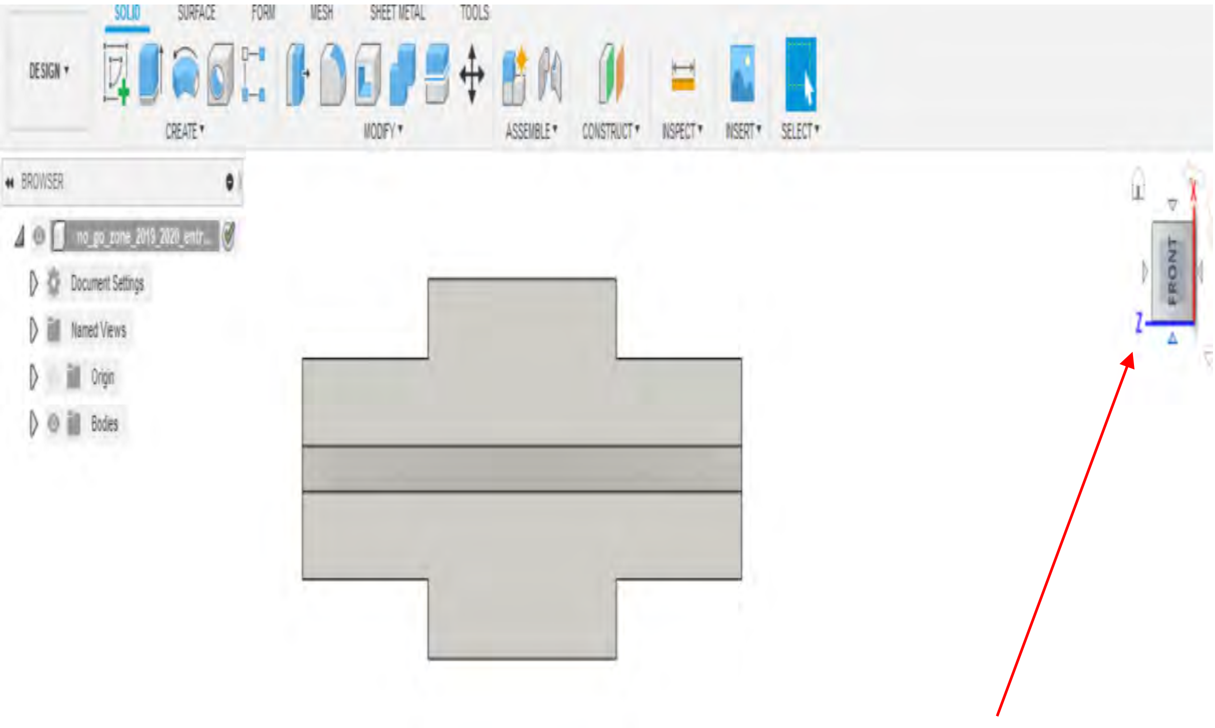
SOLID
SURFACE
FORM
MESH
SHEET METAL
TOOLS
DESIGN
CREATE
MODIFY
ASSEMBLE
CONSTRUCT
INSPECT
INSERT
SELECT
BROWSER
no_go_zone_2019_2020_entr...
Document Settings
Named Views
Origin
Bodies
FRONT

Now, click the arrow underneath the cube to view the No-Go zone.

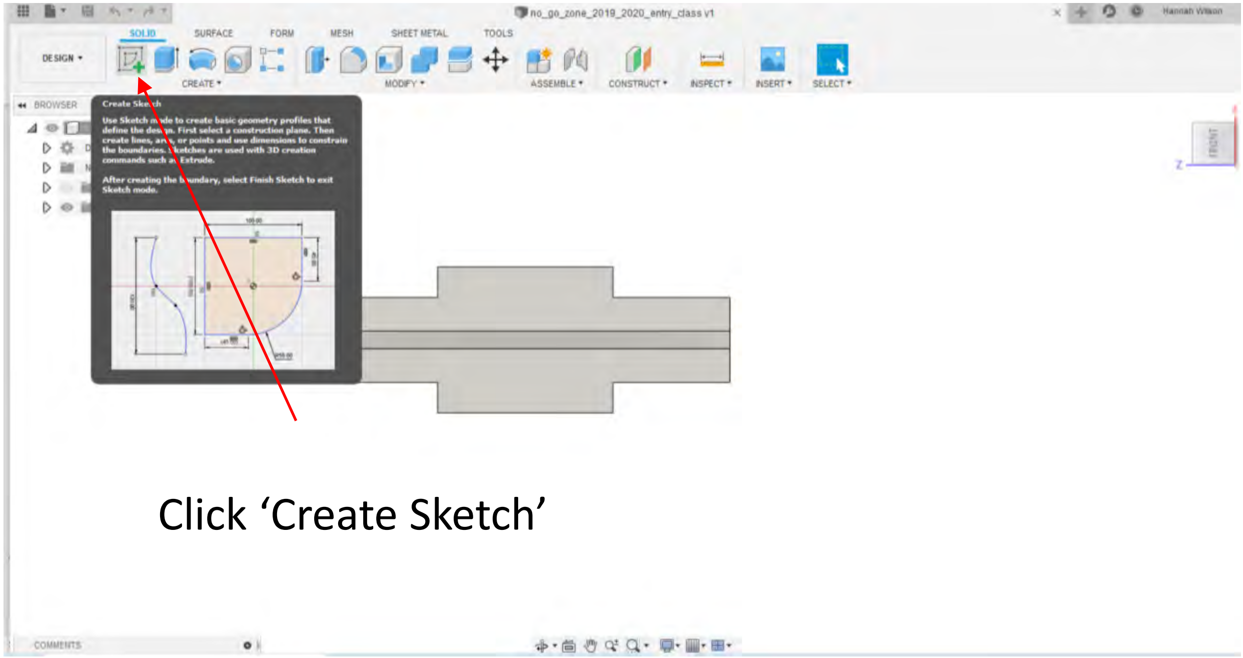
no_go_zone_2019_2020_entry_class v1
SOLID
SURFACE
FORM
MESH
SHEET METAL
TOOLS
DESIGN
CREATE
MODIFY
ASSEMBLE
CONSTRUCT
INSPECT
INSERT
SELECT
BROWSER
COMMENTS

Create Sketch

Use Sketch mode to create basic geometry profiles that define the design. First select a construction plane. Then create lines, arcs, or points and use dimensions to constrain the boundaries. Sketches are used with 3D creation commands such as Extrude.

After creating the boundary, select Finish Sketch to exit Sketch mode.

Click ‘Create Sketch’

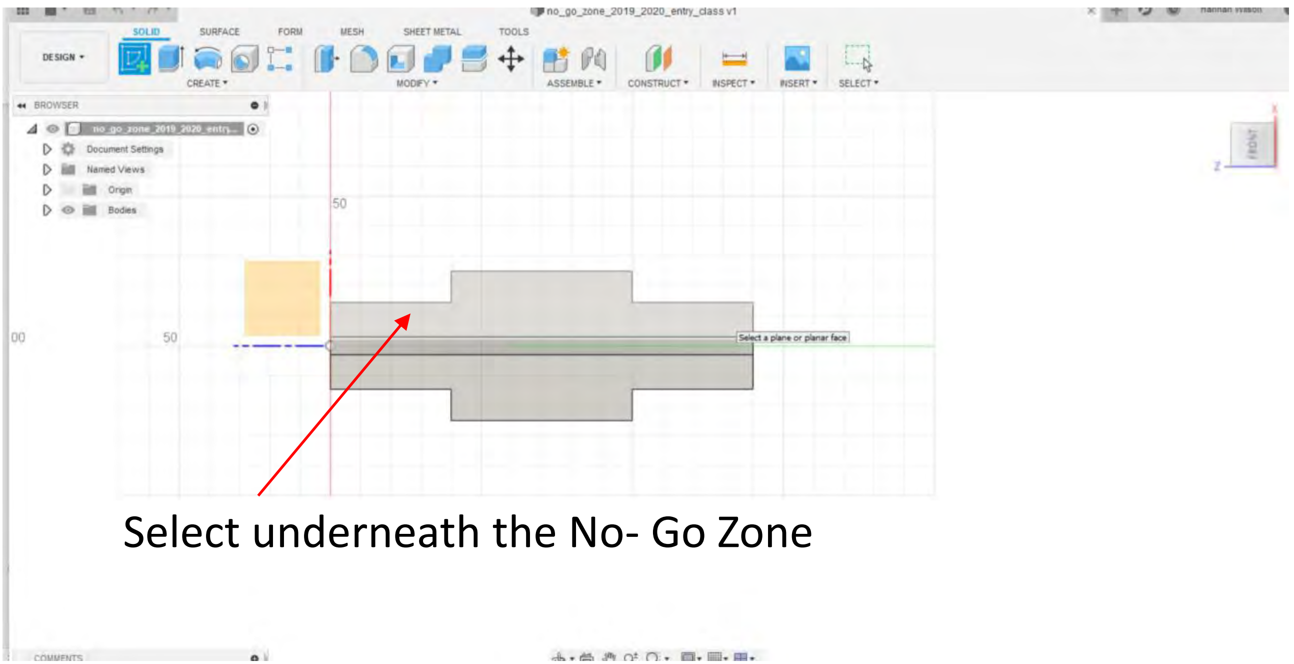
no_go_zone_2019_2020_entry_class v1
SOLID
SURFACE
FORM
MESH
SHEET METAL
TOOLS
DESIGN
CREATE
MODIFY
ASSEMBLE
CONSTRUCT
INSPECT
INSERT
SELECT
BROWSER
no_go_zone_2019_2020_entry...
Document Settings
Named Views
Origin
Bodies
50
50
Select a plane or planar face
COMMENTS

Select underneath the No- Go Zone

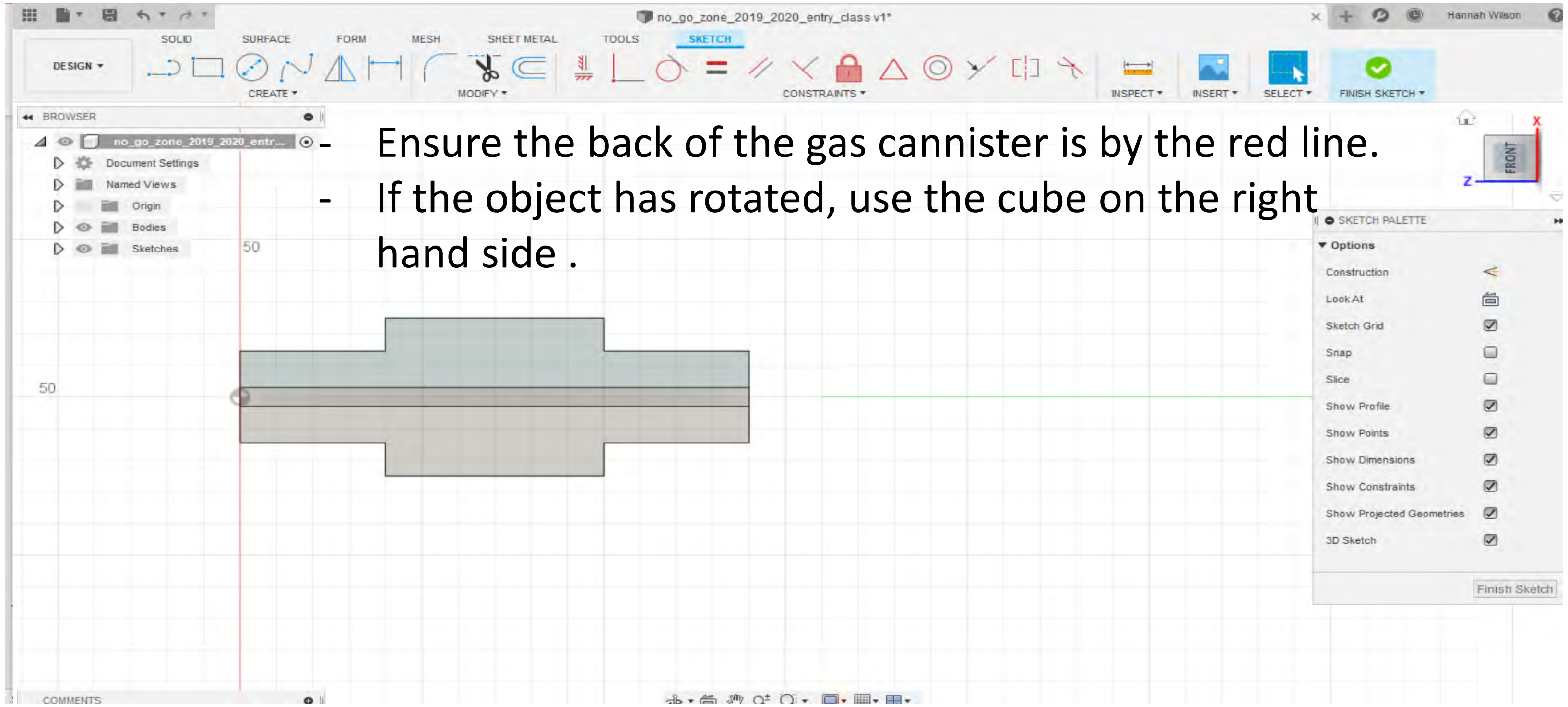
no_go_zone_2019_2020_entry_class v1*
Hannah Wilson
SOLID
SURFACE
FORM
MESH
SHEET METAL
TOOLS
SKETCH
DESIGN
CREATE
MODIFY
CONSTRAINTS
INSPECT
INSERT
SELECT
FINISH SKETCH
BROWSER
no_go_zone_2019_2020_entr...
Document Settings
Named Views
Origin
Bodies
Sketches
50
50
FRONT
Z
X
COMMENTS

- Ensure the back of the gas cannister is by the red line.
- If the object has rotated, use the cube on the right hand side .

SKETCH PALETTE

Options

Construction

Look At

Sketch Grid ☑

Snap ☐

Slice ☐

Show Profile ☑

Show Points ☑

Show Dimensions ☑

Show Constraints ☑

Show Projected Geometries ☑

3D Sketch ☑

Finish Sketch

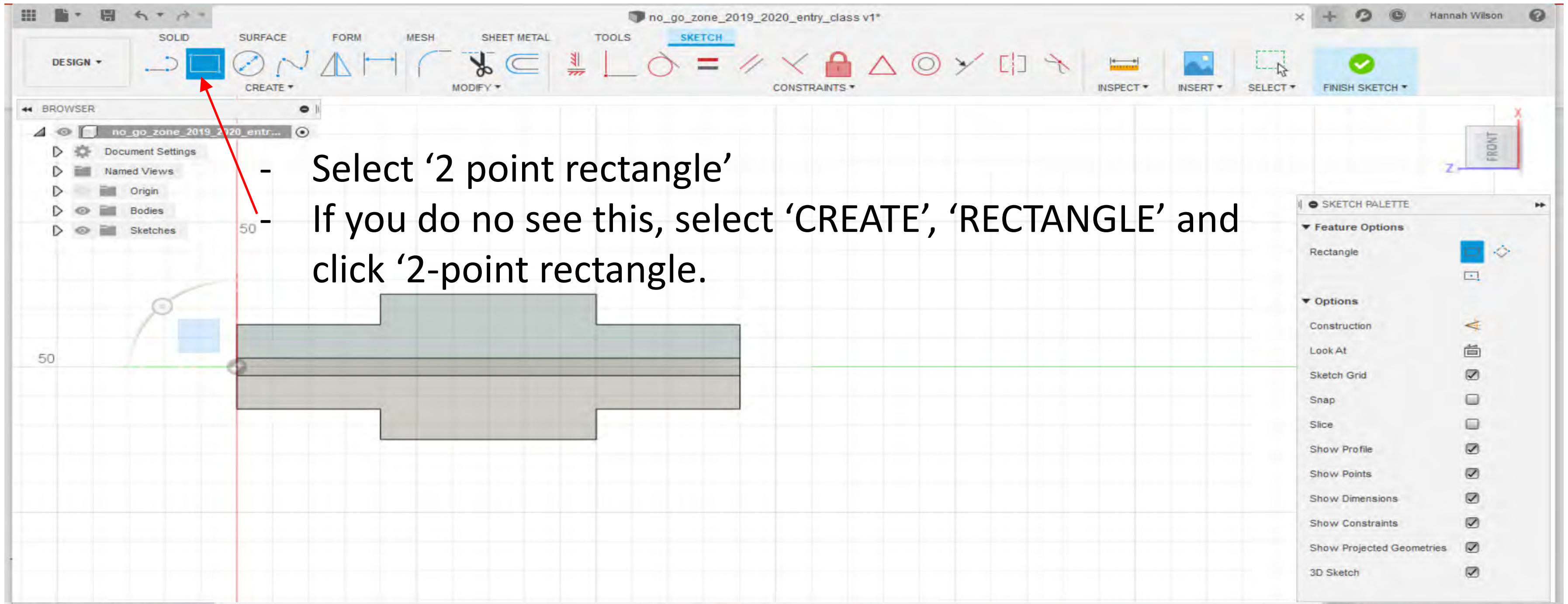
no_go_zone_2019_2020_entry_class v1*
Hannah Wilson
SOLID
SURFACE
FORM
MESH
SHEET METAL
TOOLS
SKETCH
DESIGN
CREATE
MODIFY
CONSTRAINTS
INSPECT
INSERT
SELECT
FINISH SKETCH
BROWSER
Document Settings
Named Views
Origin
Bodies
Sketches
50
50
FRONT
SKETCH PALETTE
Feature Options
Rectangle
Options
Construction
Look At
Sketch Grid
Snap
Slice
Show Profile
Show Points
Show Dimensions
Show Constraints
Show Projected Geometries
3D Sketch

- Select ‘2 point rectangle’
- If you do no see this, select ‘CREATE’, ‘RECTANGLE’ and click ‘2-point rectangle.

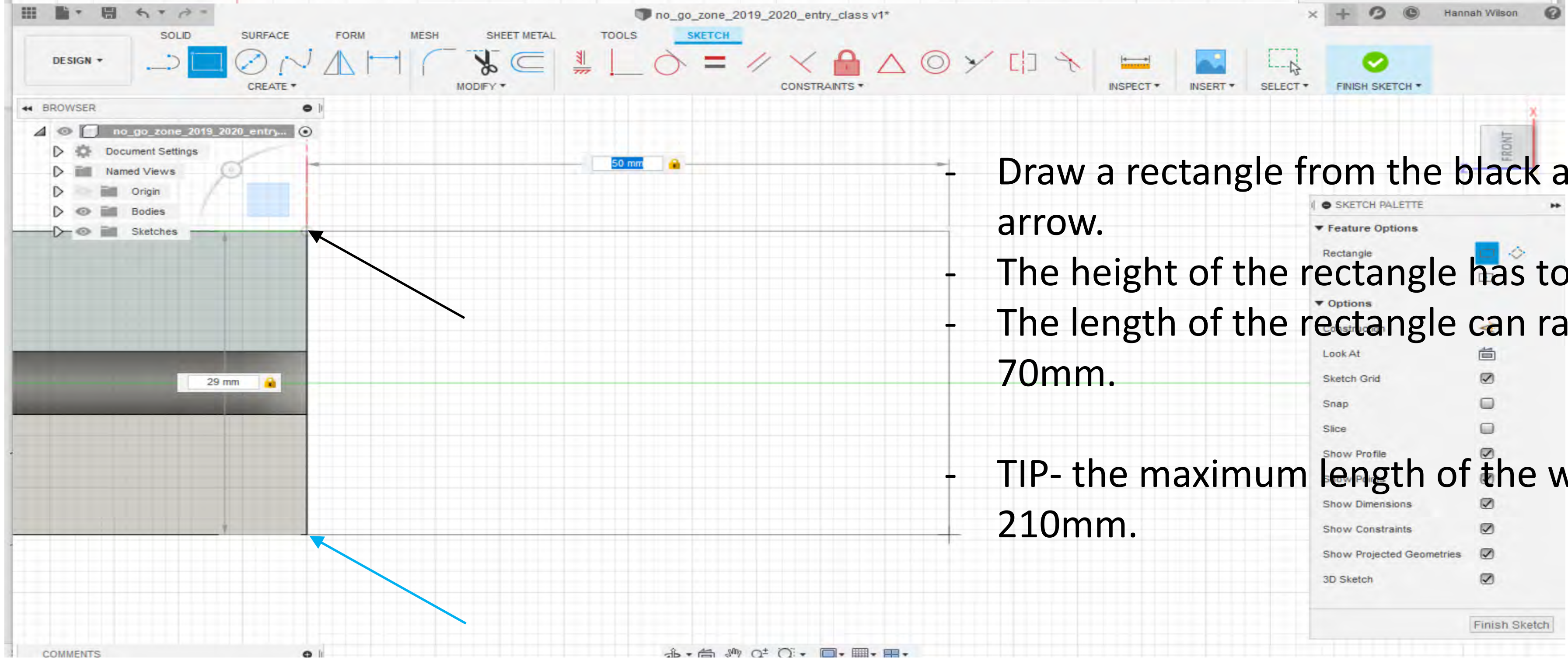
no_go_zone_2019_2020_entry_class v1*
Hannah Wilson
SOLID
SURFACE
FORM
MESH
SHEET METAL
TOOLS
SKETCH
DESIGN
CREATE
MODIFY
CONSTRAINTS
INSPECT
INSERT
SELECT
FINISH SKETCH
BROWSER
Document Settings
Named Views
Origin
Bodies
Sketches
50 mm
29 mm
FRONT
SKETCH PALETTE
Feature Options
Rectangle
Options
Look At
Sketch Grid
Snap
Slice
Show Profile
Show Dimensions
Show Constraints
Show Projected Geometries
3D Sketch
Finish Sketch
COMMENTS

- Draw a rectangle from the black arrow to the blue arrow.
- The height of the rectangle has to be 29mm.
- The length of the rectangle can range from 1mm to 70mm.

- TIP- the maximum length of the whole car can be 210mm.

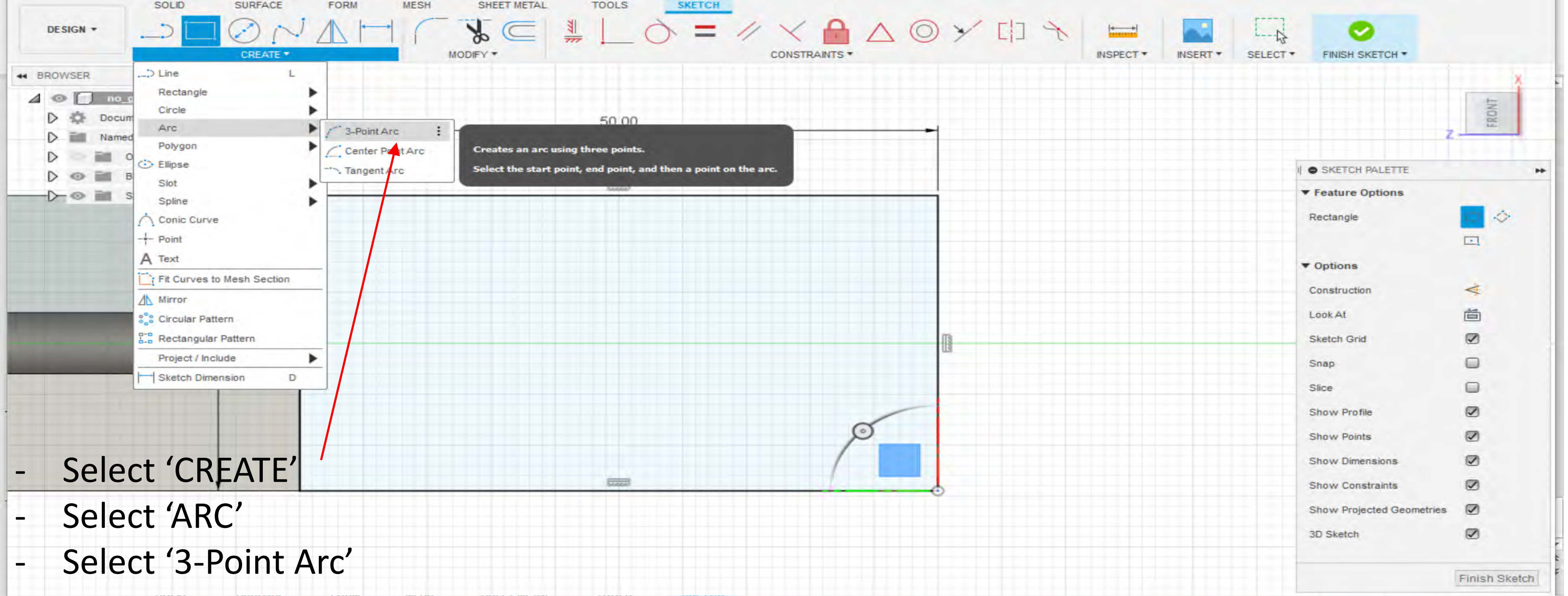
SOLID
SURFACE
FORM
MESH
SHEET METAL
TOOLS
SKETCH
DESIGN
CREATE
MODIFY
CONSTRAINTS
INSPECT
INSERT
SELECT
FINISH SKETCH
BROWSER
Line L
Rectangle
Circle
Arc
Polygon
Ellipse
Slot
Spline
Conic Curve
Point
Text
Fit Curves to Mesh Section
Mirror
Circular Pattern
Rectangular Pattern
Project / Include
Sketch Dimension D
3-Point Arc
Center Point Arc
Tangent Arc
50.00
FRONT
SKETCH PALETTE
Feature Options
Rectangle
Options
Finish Sketch

Creates an arc using three points.

Select the start point, end point, and then a point on the arc.

- Construction
- Look At
- Sketch Grid ☑
- Snap ☐
- Slice ☐
- Show Profile ☑
- Show Points ☑
- Show Dimensions ☑
- Show Constraints ☑
- Show Projected Geometries ☑
- 3D Sketch ☑

- Select ‘CREATE’
- Select ‘ARC’
- Select ‘3-Point Arc’

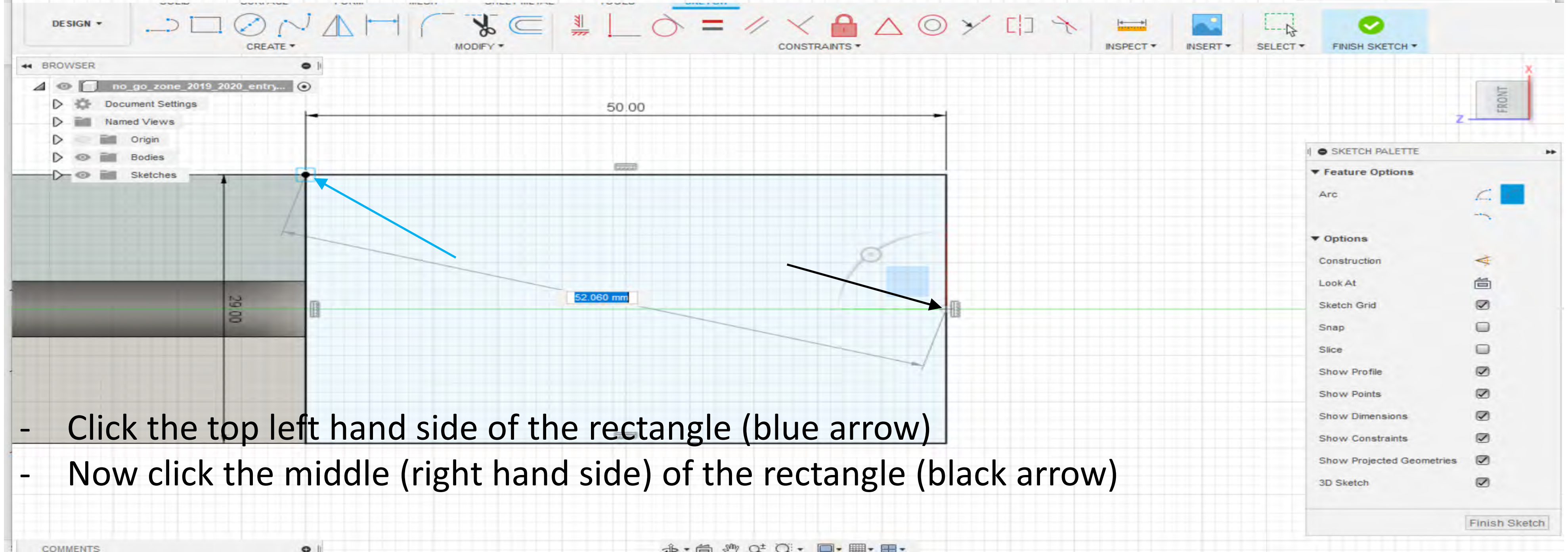
DESIGN
CREATE
MODIFY
CONSTRAINTS
INSPECT
INSERT
SELECT
FINISH SKETCH
BROWSER
no_go_zone_2019_2020_entry...
Document Settings
Named Views
Origin
Bodies
Sketches
50.00
29.00
52.060 mm
FRONT
SKETCH PALETTE
Feature Options
Arc
Options
Finish Sketch
COMMENTS

- Construction
- Look At
- Sketch Grid ☑
- Snap ☐
- Slice ☐
- Show Profile ☑
- Show Points ☑
- Show Dimensions ☑
- Show Constraints ☑
- Show Projected Geometries ☑
- 3D Sketch ☑

- Click the top left hand side of the rectangle (blue arrow)
- Now click the middle (right hand side) of the rectangle (black arrow)

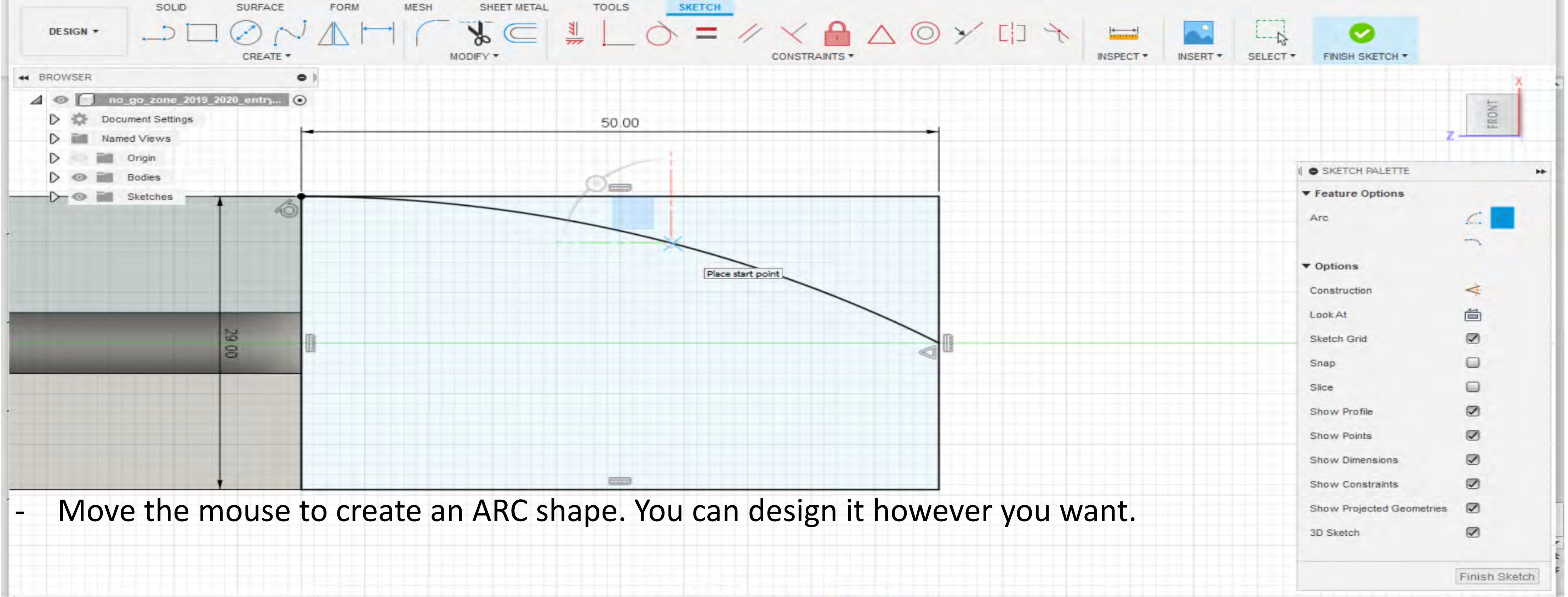
SOLID
SURFACE
FORM
MESH
SHEET METAL
TOOLS
SKETCH
DESIGN
CREATE
MODIFY
CONSTRAINTS
INSPECT
INSERT
SELECT
FINISH SKETCH
BROWSER
no_go_zone_2019_2020_entry...
Document Settings
Named Views
Origin
Bodies
Sketches
50.00
29.00
Place start point
FRONT
SKETCH PALETTE
Feature Options
Arc
Options
Construction
Look At
Finish Sketch

Sketch Grid ☑
Snap ☐
Slice ☐
Show Profile ☑
Show Points ☑
Show Dimensions ☑
Show Constraints ☑
Show Projected Geometries ☑
3D Sketch ☑

- Move the mouse to create an ARC shape. You can design it however you want.

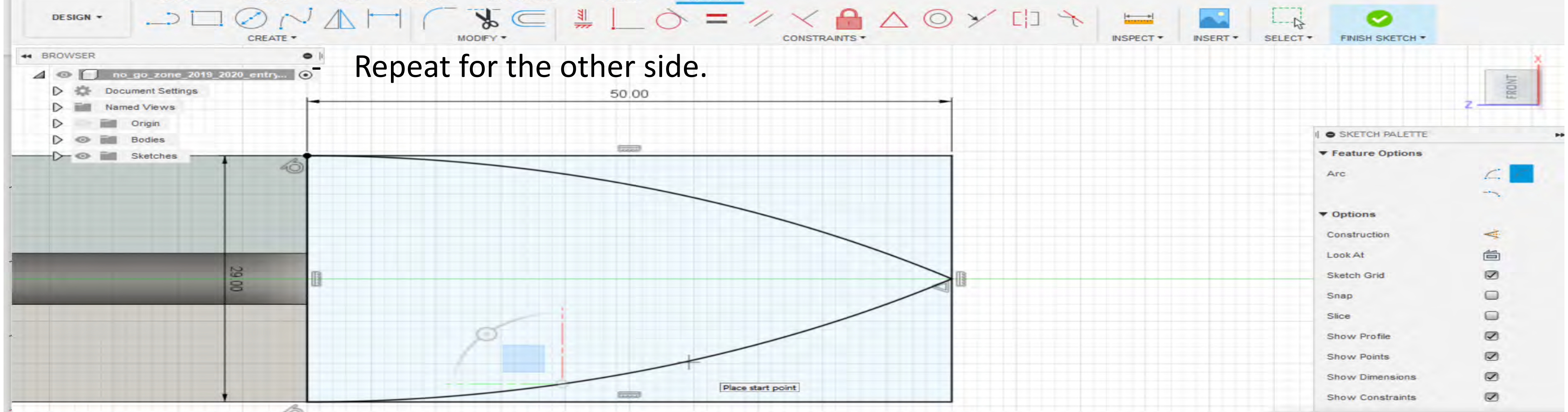
SOLID
SURFACE
FORM
MESH
SHEET METAL
TOOLS
SKETCH
DESIGN
CREATE
MODIFY
CONSTRAINTS
INSPECT
INSERT
SELECT
FINISH SKETCH
BROWSER
no_go_zone_2019_2020_entry...
Document Settings
Named Views
Origin
Bodies
Sketches
50.00
29.00
Place start point
FRONT
SKETCH PALETTE
Feature Options
Arc
Options
Construction
Look At

Sketch Grid ☑
Snap ☐
Slice ☐
Show Profile ☑
Show Points ☑
Show Dimensions ☑
Show Constraints ☑

- Repeat for the other side.

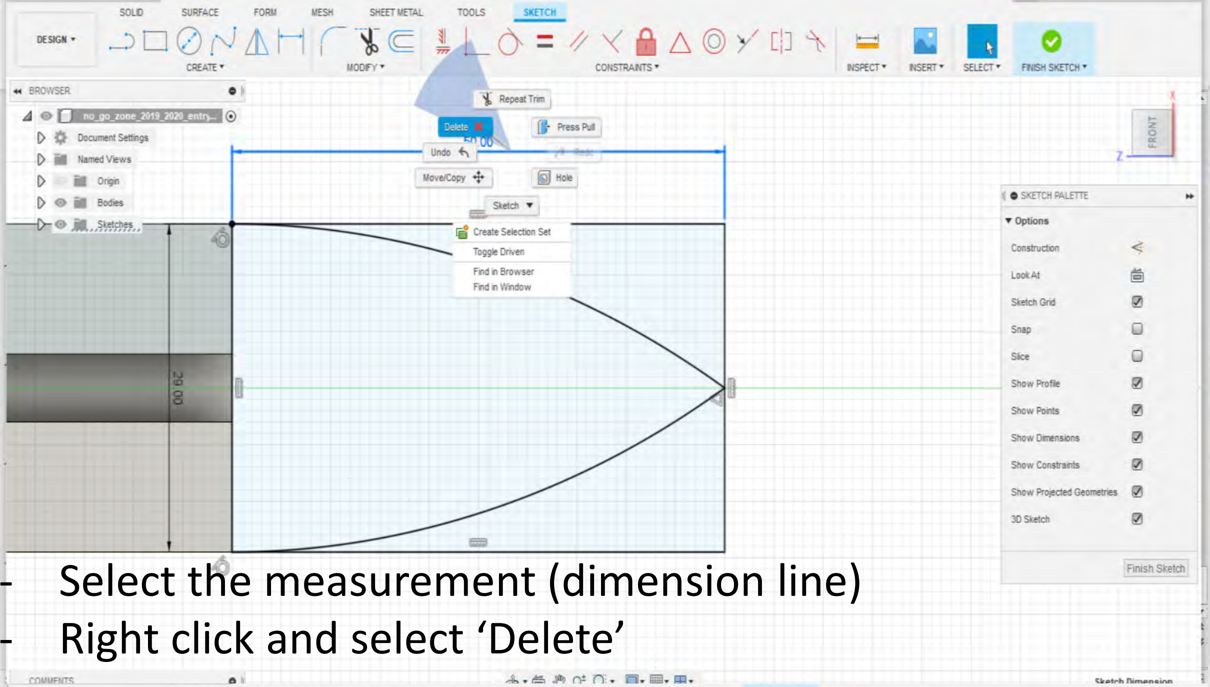
Repeat Trim
Delete
Press Pull
Undo
Move/Copy
Hole
Sketch
Create Selection Set
Toggle Driven
Find in Browser
Find in Window
29.00
SKETCH PALETTE
Finish Sketch

- Select the measurement (dimension line)
- Right click and select ‘Delete’

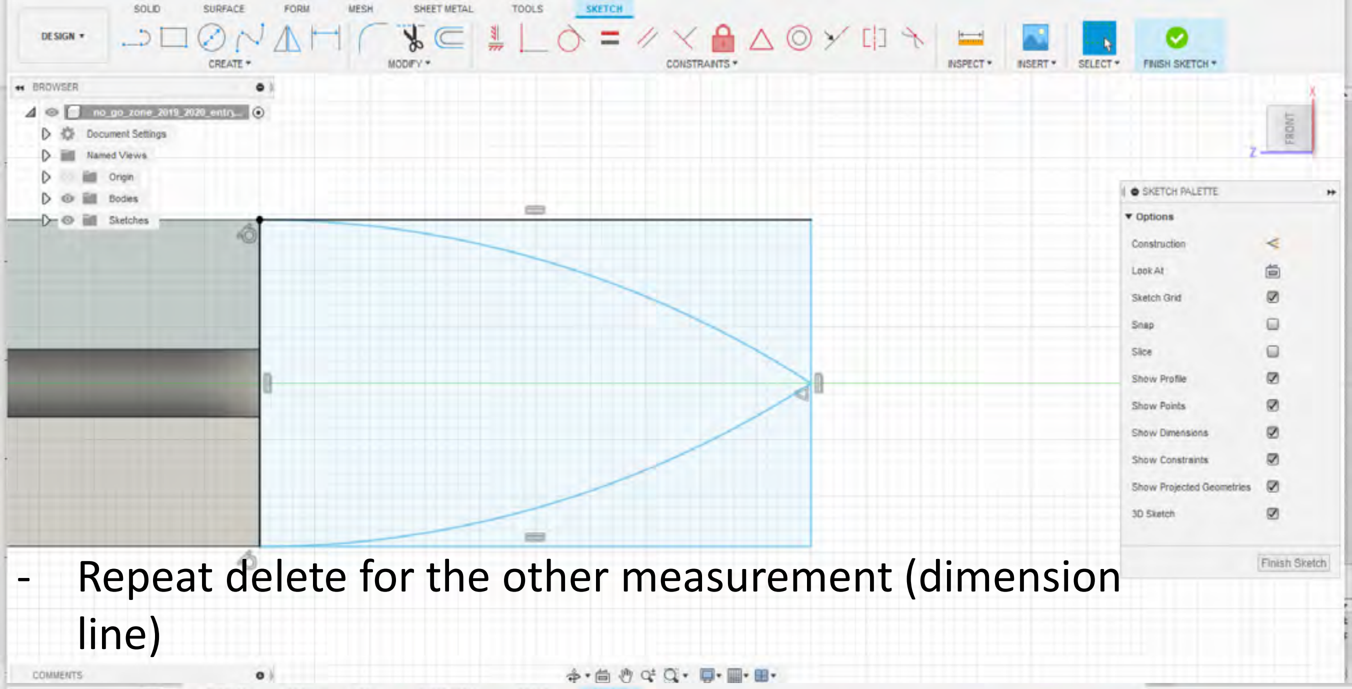
SKETCH PALETTE
Finish Sketch

- Repeat delete for the other measurement (dimension line)

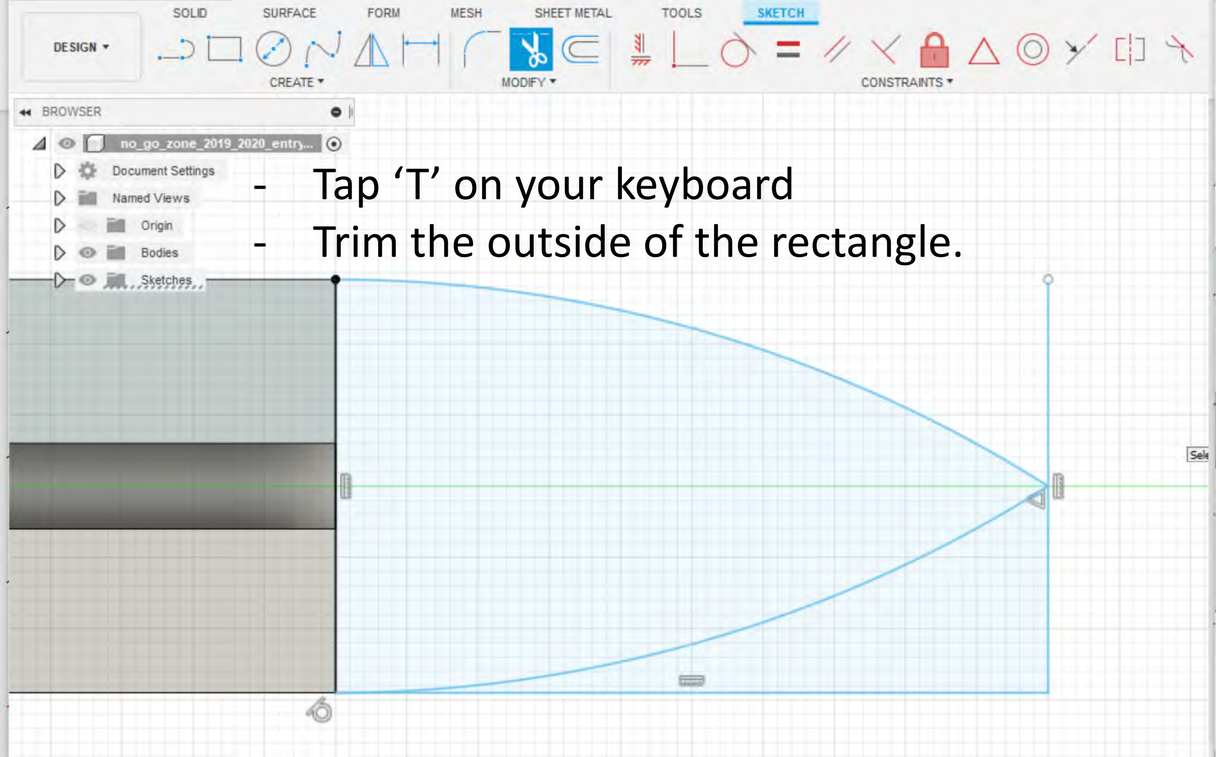

- Tap ‘T’ on your keyboard
- Trim the outside of the rectangle.

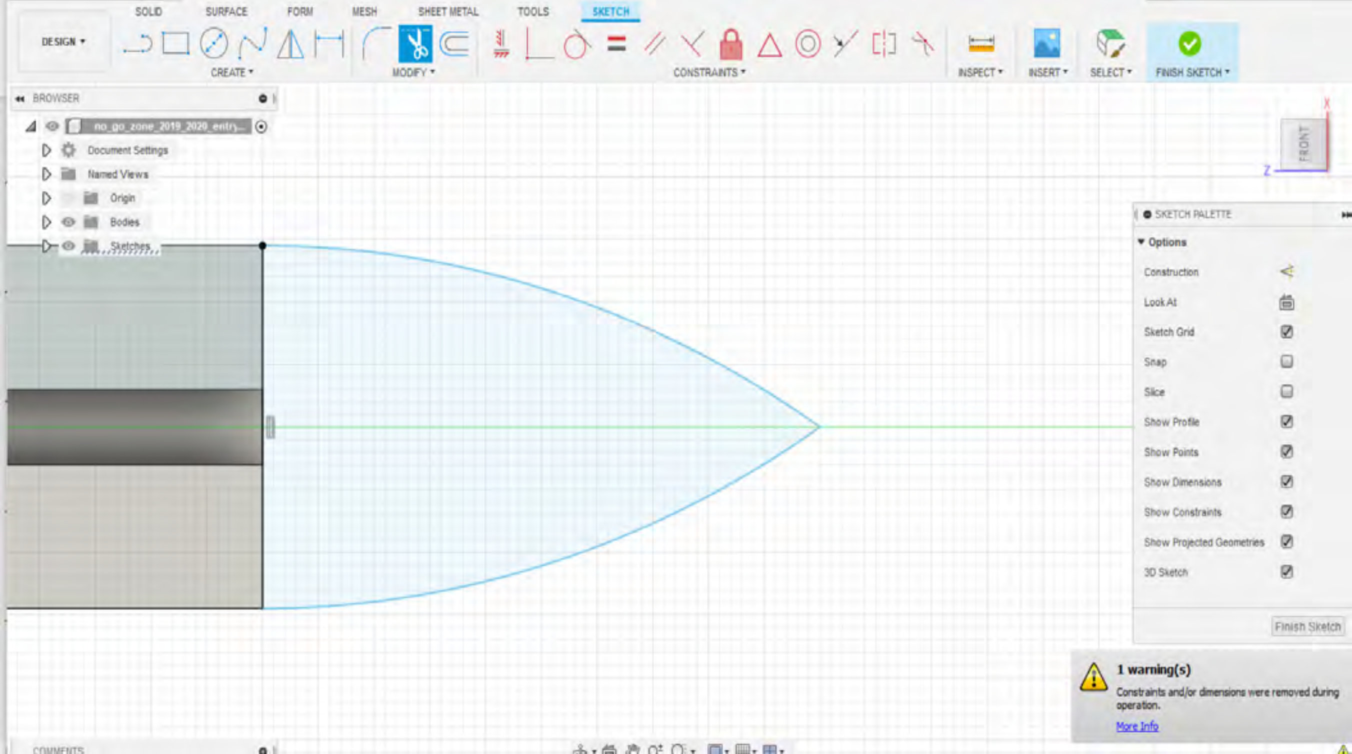

1 warning(s)
Constraints and/or dimensions were removed during operation.
More Info

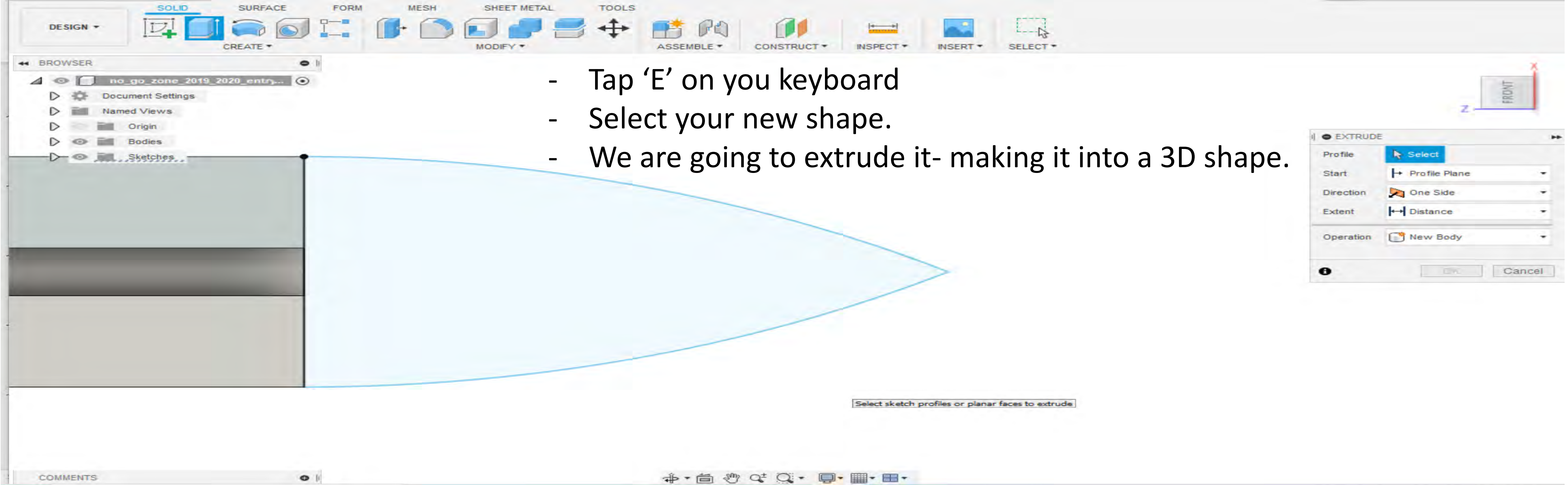
DESIGN
SOLID
SURFACE
FORM
MESH
SHEET METAL
TOOLS
CREATE
MODIFY
ASSEMBLE
CONSTRUCT
INSPECT
INSERT
SELECT
BROWSER
no_go_zone_2019_2020_entry...
Document Settings
Named Views
Origin
Bodies
Sketches
COMMENTS
FRONT

- Tap ‘E’ on you keyboard
- Select your new shape.
- We are going to extrude it- making it into a 3D shape.

EXTRUDE

Profile	Select
Start	Profile Plane
Direction	One Side
Extent	Distance
Operation	New Body

OK Cancel

Select sketch profiles or planar faces to extrude

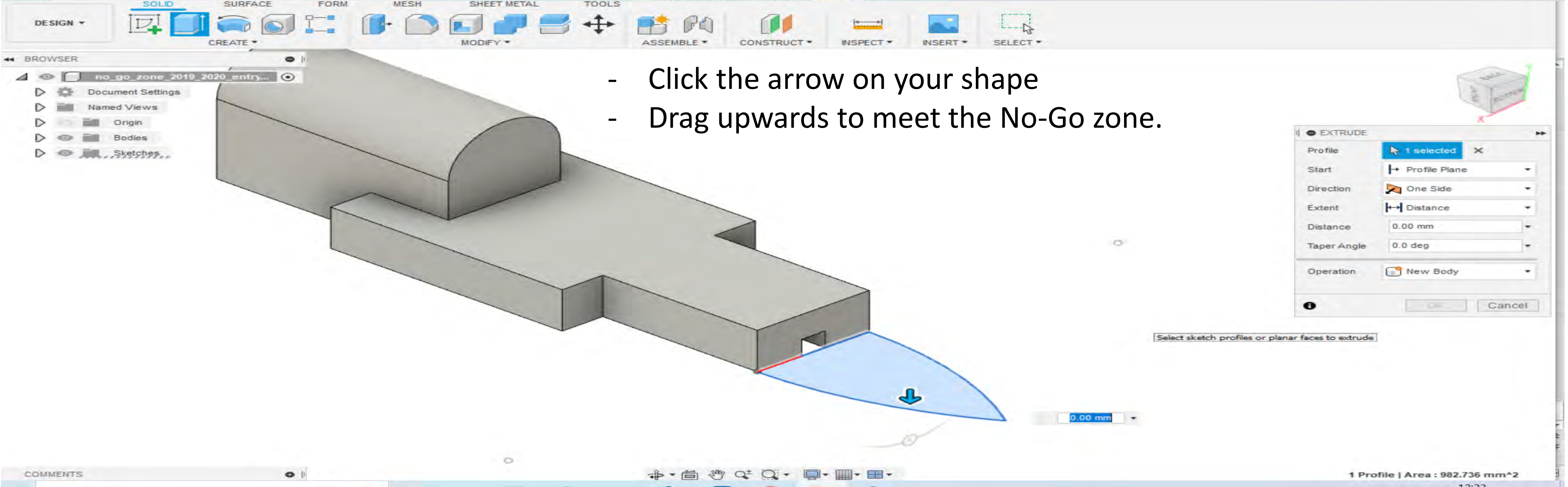
DESIGN
SOLID
SURFACE
FORM
MESH
SHEET METAL
TOOLS
CREATE
MODIFY
ASSEMBLE
CONSTRUCT
INSPECT
INSERT
SELECT
BROWSER
no_go_zone_2019_2020_entry...
Document Settings
Named Views
Origin
Bodies
Sketches
COMMENTS
0.00 mm

- Click the arrow on your shape
- Drag upwards to meet the No-Go zone.

EXTRUDE

Profile	1 selected
Start	Profile Plane
Direction	One Side
Extent	Distance
Distance	0.00 mm
Taper Angle	0.0 deg
Operation	New Body

OK Cancel

Select sketch profiles or planar faces to extrude

1 Profile | Area : 982.736 mm^2

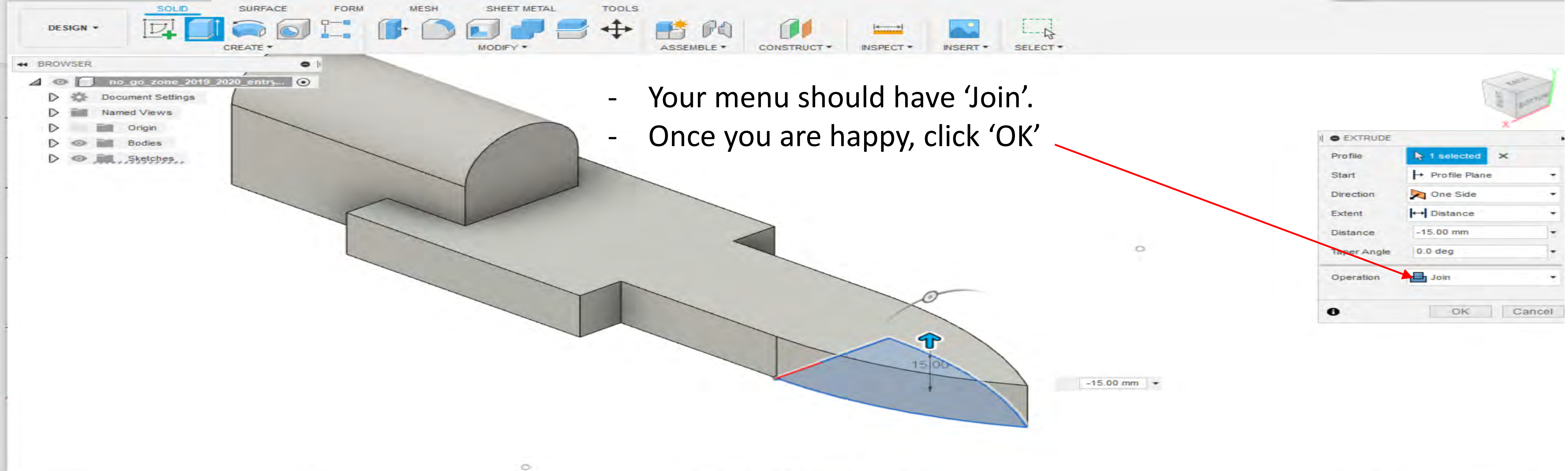

- Your menu should have ‘Join’.
- Once you are happy, click ‘OK’

EXTRUDE

Profile: 1 selected
Start: Profile Plane
Direction: One Side
Extent: Distance
Distance: -15.00 mm
Taper Angle: 0.0 deg
Operation: Join

DESIGN
SOLID
SURFACE
FORM
MESH
SHEET METAL
TOOLS
CREATE
MODIFY
ASSEMBLE
CONSTRUCT
INSPECT
INSERT
SELECT
BROWSER
no_go_zone_2019_2020_entry...
Document Settings
Named Views
Origin
Bodies
Sketches
15.00
-15.00 mm
OK
Cancel

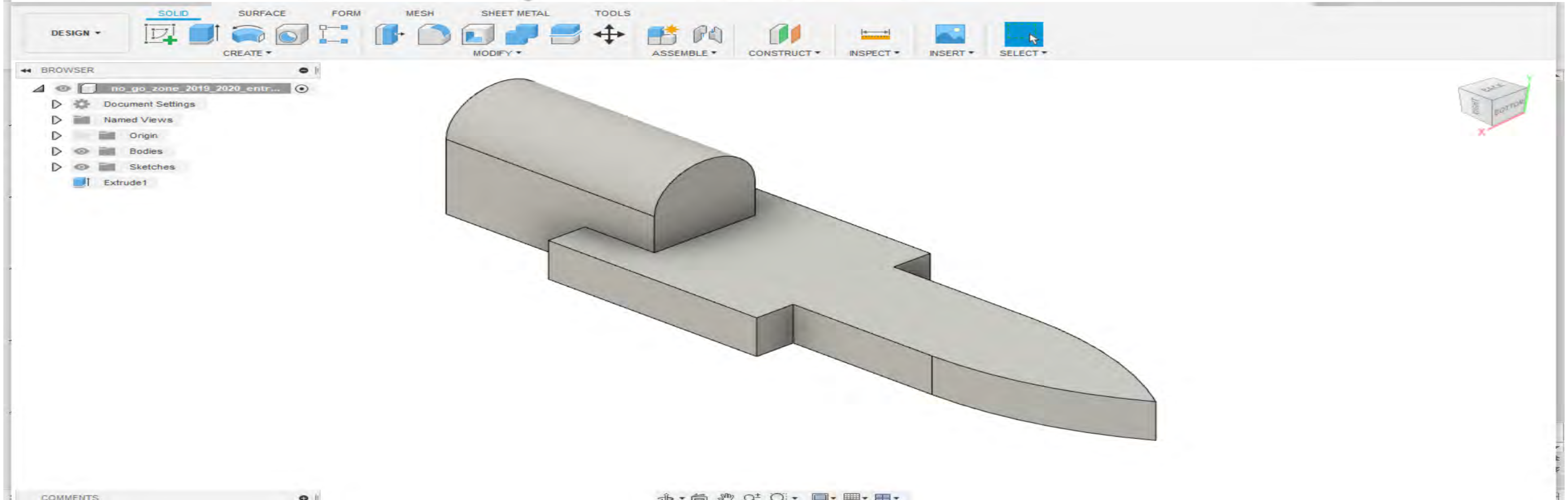

DESIGN
SOLID
SURFACE
FORM
MESH
SHEET METAL
TOOLS
CREATE
MODIFY
ASSEMBLE
CONSTRUCT
INSPECT
INSERT
SELECT
BROWSER
no_go_zone_2019_2020_entr...
Document Settings
Named Views
Origin
Bodies
Sketches
Extrude1
COMMENTS

Well done, you have created the front of your car!

Remember-

- You can use the timeline on the bottom to edit parts of your car.
- This is only a sample car. Try to play around with the tools you have used today to come up with your own design.

If you want to try something new to the front of the car, take a look at the next few slides.

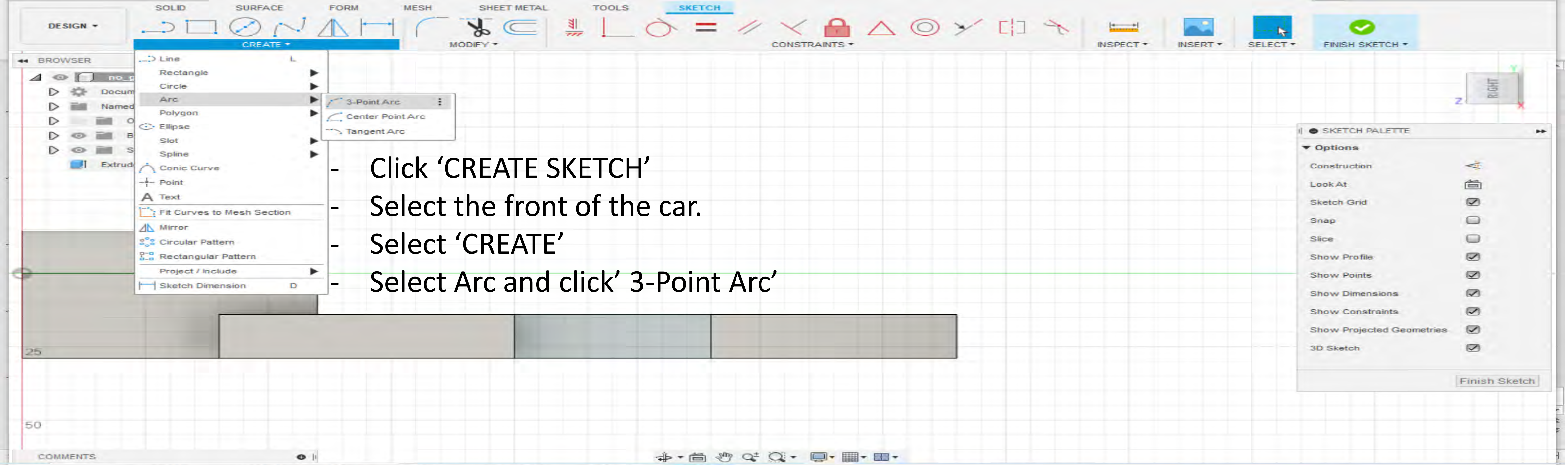
SOLID
SURFACE
FORM
MESH
SHEET METAL
TOOLS
SKETCH
DESIGN
CREATE
MODIFY
CONSTRAINTS
INSPECT
INSERT
SELECT
FINISH SKETCH
BROWSER
Line
Rectangle
Circle
Arc
Polygon
Ellipse
Slot
Spline
Conic Curve
Point
Text
Fit Curves to Mesh Section
Mirror
Circular Pattern
Rectangular Pattern
Project / Include
Sketch Dimension
3-Point Arc
Center Point Arc
Tangent Arc
RIGHT
25
50
COMMENTS

SKETCH PALETTE

Options

- Construction
- Look At
- Sketch Grid ☑
- Snap ☐
- Slice ☐
- Show Profile ☑
- Show Points ☑
- Show Dimensions ☑
- Show Constraints ☑
- Show Projected Geometries ☑
- 3D Sketch ☑

Finish Sketch

- Click ‘CREATE SKETCH’
- Select the front of the car.
- Select ‘CREATE’
- Select Arc and click’ 3-Point Arc’

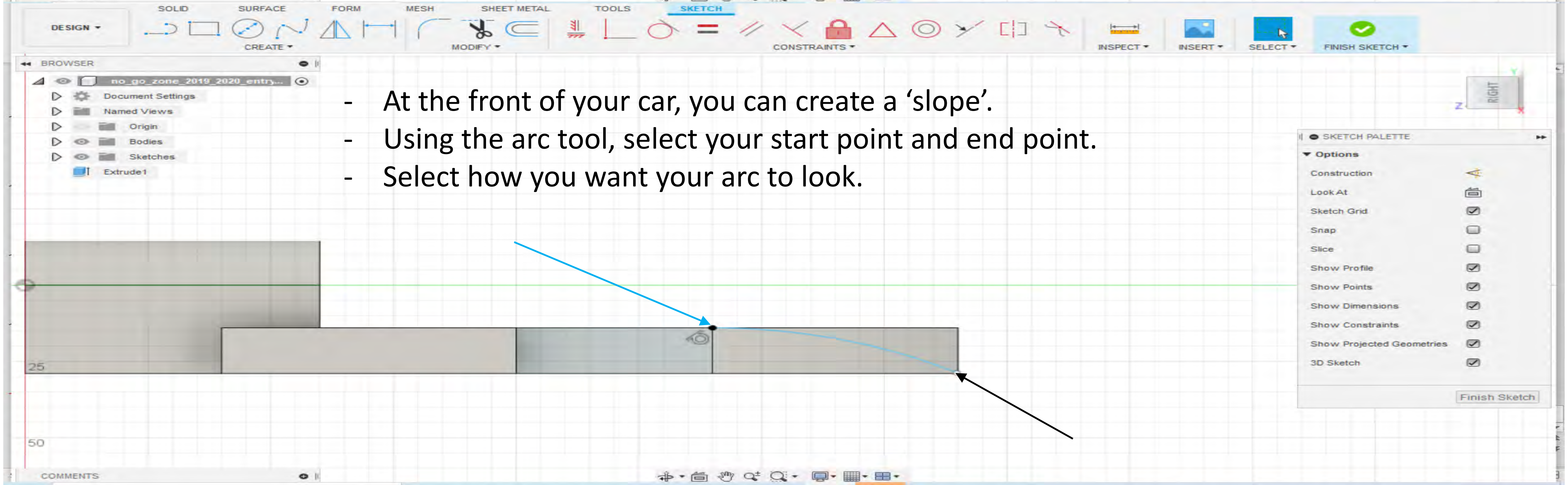
SOLID
SURFACE
FORM
MESH
SHEET METAL
TOOLS
SKETCH
DESIGN
CREATE
MODIFY
CONSTRAINTS
INSPECT
INSERT
SELECT
FINISH SKETCH
BROWSER
no_go_zone_2019_2020_entry...
Document Settings
Named Views
Origin
Bodies
Sketches
Extrude1
RIGHT
25
50
COMMENTS

SKETCH PALETTE

Options

- Construction
- Look At
- Sketch Grid ☑
- Snap ☐
- Slice ☐
- Show Profile ☑
- Show Points ☑
- Show Dimensions ☑
- Show Constraints ☑
- Show Projected Geometries ☑
- 3D Sketch ☑

Finish Sketch

- At the front of your car, you can create a ‘slope’.
- Using the arc tool, select your start point and end point.
- Select how you want your arc to look.

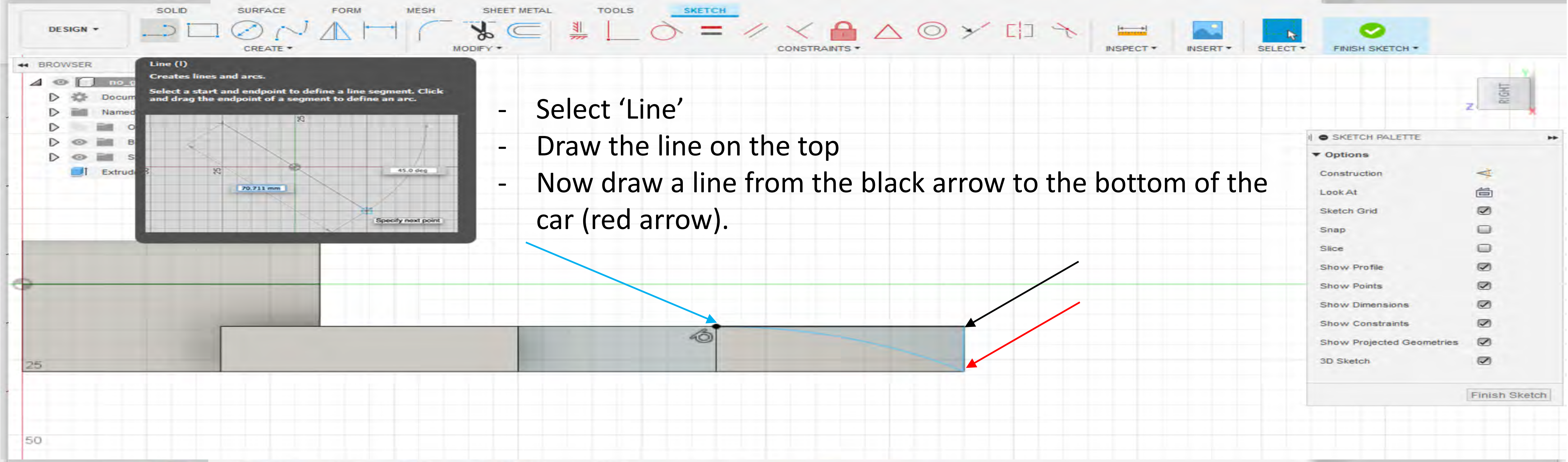
DESIGN
SOLID
SURFACE
FORM
MESH
SHEET METAL
TOOLS
SKETCH
CREATE
MODIFY
CONSTRAINTS
INSPECT
INSERT
SELECT
FINISH SKETCH
BROWSER
RIGHT
25
50

Line (l)

Creates lines and arcs.

Select a start and endpoint to define a line segment. Click and drag the endpoint of a segment to define an arc.

70.711 mm
45.0 deg
Specify next point

SKETCH PALETTE

Options

- Construction
- Look At
- Sketch Grid ☑
- Snap ☐
- Slice ☐
- Show Profile ☑
- Show Points ☑
- Show Dimensions ☑
- Show Constraints ☑
- Show Projected Geometries ☑
- 3D Sketch ☑

Finish Sketch

- Select ‘Line’
- Draw the line on the top
- Now draw a line from the black arrow to the bottom of the car (red arrow).

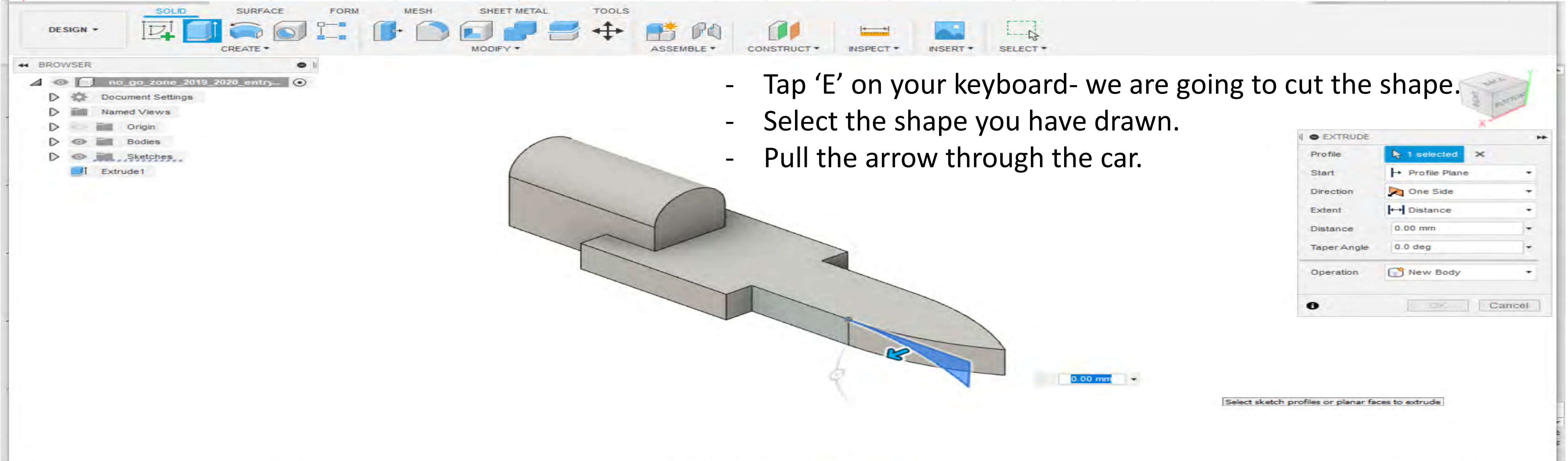
DESIGN
SOLID
SURFACE
FORM
MESH
SHEET METAL
TOOLS
CREATE
MODIFY
ASSEMBLE
CONSTRUCT
INSPECT
INSERT
SELECT
BROWSER
no_go_zone_2019_2020_entry...
Document Settings
Named Views
Origin
Bodies
Sketches
Extrude1
0.00 mm

EXTRUDE

Profile	1 selected
Start	Profile Plane
Direction	One Side
Extent	Distance
Distance	0.00 mm
Taper Angle	0.0 deg
Operation	New Body

OK Cancel

Select sketch profiles or planar faces to extrude

- Tap ‘E’ on your keyboard- we are going to cut the shape.
- Select the shape you have drawn.
- Pull the arrow through the car.

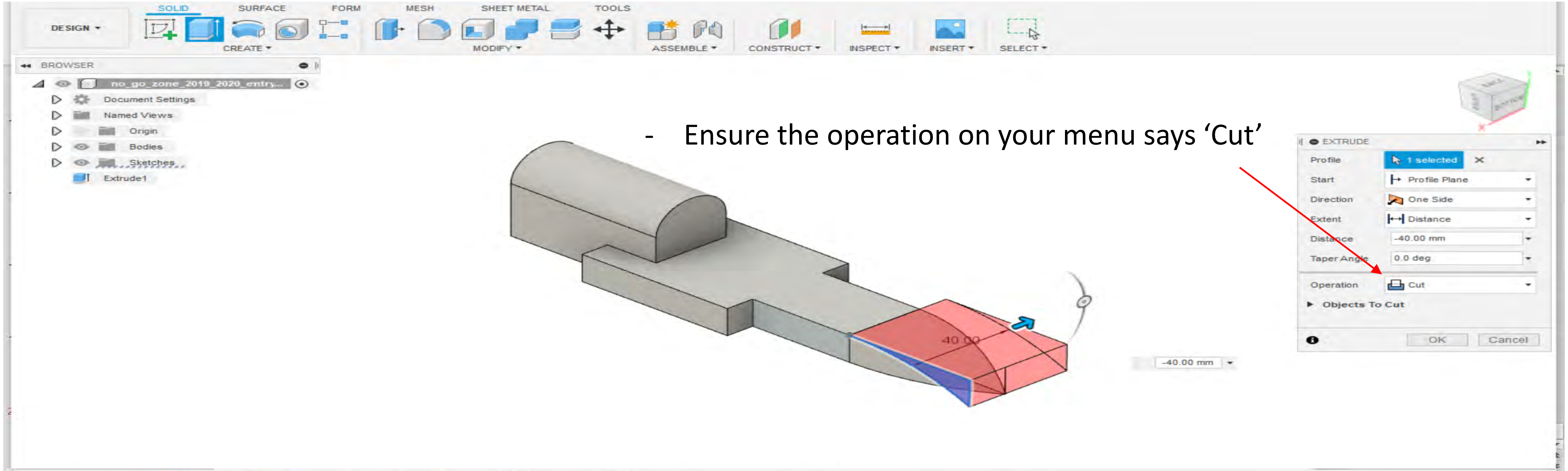
SOLID
SURFACE
FORM
MESH
SHEET METAL
TOOLS
DESIGN
CREATE
MODIFY
ASSEMBLE
CONSTRUCT
INSPECT
INSERT
SELECT
BROWSER
no_go_zone_2019_2020_entry...
Document Settings
Named Views
Origin
Bodies
Sketches
Extrude1
40.00
-40.00 mm

- Ensure the operation on your menu says ‘Cut’

EXTRUDE

Profile: 1 selected

Start: Profile Plane

Direction: One Side

Extent: Distance

Distance: -40.00 mm

Taper Angle: 0.0 deg

Operation: Cut

Objects To Cut

OK Cancel

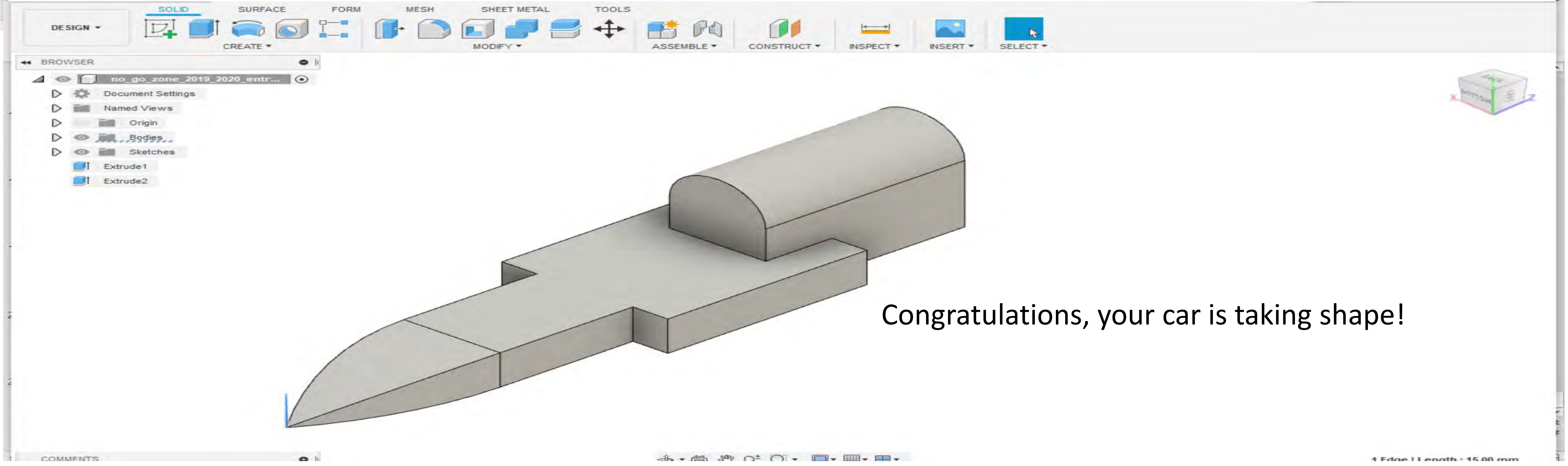
SOLID
SURFACE
FORM
MESH
SHEET METAL
TOOLS
DESIGN
CREATE
MODIFY
ASSEMBLE
CONSTRUCT
INSPECT
INSERT
SELECT
BROWSER
no_go_zone_2019_2020_entr...
Document Settings
Named Views
Origin
Bodies
Sketches
Extrude1
Extrude2
COMMENTS

Congratulations, your car is taking shape!